NYC®



产品手册

模具标准件

STANDARD DIE COMPONENTS
PRODUCTS MANUAL

RoHS



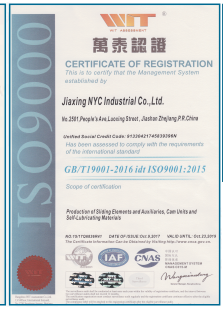



ISO9001:2015
质量管理体系
Quality systemcertified

中国滑动轴承标准化发起委员单位之一



嘉兴迈特尔宝欣机械工业有限公司（NYC）是2003年成立的中欧合资企业。股东双方分别是奥地利钢铁联合集团（奥钢联）和嘉善百纳商贸有限公司。

我们致力于——制造高品质斜楔机构，生产销售各类标准的冲压模具导向件，热成型模具镶块，氮气弹簧，及其他各类FA工厂自动化定制精密部件，并逐步形成产业化优势和必要的差异化特色。

经十数年的不懈努力、坚持专注，与行业内几近所有国际知名品牌建立了稳定的合作关系，培育了良好的知名度和美誉度。同时，先后获得“中国重点骨干模具企业”，“国家高新技术企业”等荣誉称号。

NYC具备完善的销售、技术研发、生产、供应链管理、质量和售后服务体系。

在我们贯彻“追求卓越”和“领先一步”的理念下，立足于中国，服务予世界。

JIAXING NYC INDUSTRIAL CO., LTD is a sino-european joint venture established in 2003. The shareholders are Voestalpine and Jiashan Baina Commercial & Trade Co., Ltd.

We are committed to manufacture quality CAM units, research & produce all kinds of standard stamping Guide Elements, Cam Units, Die Units for Hot Forming, Gas springs and other various customized precision components for FA Factory Automation, and gradually form the industrialization advantages and necessary differentiation features.

After decades of unremitting efforts and persistent concentration, NYC has established stable cooperative relations with almost all international famous brands in this field. At the same time, we have won the “China Key Backbone Mold Enterprises”, “National High-Tech Enterprises”and other honorary titles.

NYC has its perfect sales, technical research and development, production, supply chain management, quality and after-sales service system.

We carry out the concept of “pursuit of excellence” and “one step ahead”, based in China, to serve the world.

Contents

NYC



50001
固体自润滑导套/轴承
Oilless Guide Bushes
Page 3-4

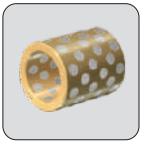

50001-1
固体特殊自润滑导套
Oilless Guide Bushes
Page 5-6



50001-2
绝缘自润滑衬套
Plastic insulation Bushes
Page 7

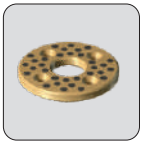

50002
止推垫片
Thrust Washers
Page 8



50003
边法兰导套
Oilless Guide Bushes with collar
Page 9

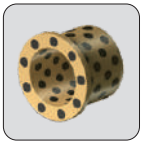

50004
边法兰导套
Oilless Guide Bushes with collar
Page 10

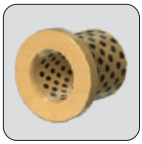

50005
边法兰导套
Oilless Guide Bushes with collar
Page 11



50006
中法兰导套
Oilless Guide Bushes with collar
Page 12



50007
中法兰导套
Oilless Guide Bushes with collar
Page 13



50008
中法兰导套
Oilless Guide Bushes with collar
Page 14



50009
边法兰导套
Oilless Guide Bushes with collar
Page 15



50010
中法兰导套
Oilless Guide Bushes with collar
Page 16



50011
中法兰导套
Oilless Guide Bushes with collar
Page 17

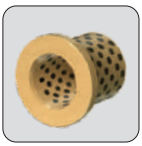

50012
边法兰导套
Oilless Guide Bushes with collar
Page 18

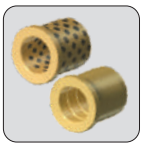

50013
50014
边法兰导套
Oilless Guide Bushes with collar
Page 19



50015
导套
Oilless Guide Bushes
Page 20

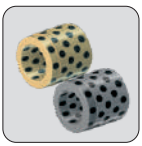

50016
50017
导套
Oilless Guide Bushes
Page 21



50018
50019
中法兰导套
Oilless Guide Bushes with collar
Page 22



50020 **50021**
50022
中法兰导套
Oilless Guide Bushes with collar
Page 23



50023 **50024**
50025
钢基铜合金
中法兰模架导套
Steel with Bronze coated internal bore
Page 24

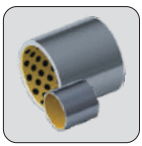

50026
50026-1
钢基铜合金导套
Oilless Bushes Bronze with Non-Liquid Lubricant Steel base
Page 25

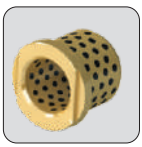

50027
压板固定式导套
Oilless Guide Bushes with collar
Page 26

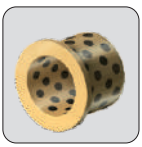

50028
边法兰导套
Oilless Guide Bushes with collar
Page 27



50030
中法兰钢导套
Injection Molhd Bush
Page 28

Contents



50031
边法兰钢导套
Steel Bushes
Page 29



50033
50034
钢基铜合金环型石墨导套
Steel, with bronze Bushes
Page 30



50271
环型润滑导套
Bronze with Non-Liquid Lubricant Rings
Page 31



50272
边法兰环型润滑导套
Bronze with Non-Liquid Lubricant Rings
Page 32



50703
中法兰环型润滑导套
Bronze with Non-Liquid Lubricant Rings
Page 33

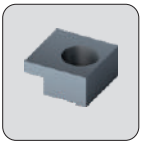

50210
压板
Clamp For Guide Bush
Page 34

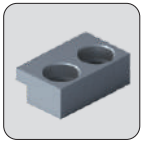

50211
压板
Clamp For Guide Bush
Page 35



50037
导柱
Guide Pillars
Page 36



50038
导柱
Guide Pillars
Page 37



50039
导柱
Guide Pillars
Page 38



50040
导柱
Guide Pillars
Page 39



50041
50042
导柱
Guide Pillars
Page 40



50043
导柱
Guide Pillars
Page 41



50044
50045
导柱
Guide Pillars
Page 42



50046
导柱
Guide Pillars
Page 43



50049
导柱
Guide Pillars
Page 44

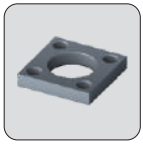

50240
50241
固定块 / 固定环
Clamp for Center Retained Pillar / Ring for Retained Pillar
Page 45

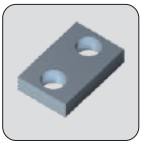

50243
压板
Clamp for Center Retained Pillar
Page 46



50050
自润滑薄型滑板
Sliding Pads Small Dimensions
Page 48



50051
滑板
Sliding Pads
Page 49



50052
钢基导板
Steel Sliding Pads
Page 50



50055
导板
Sliding Pads
Page 51

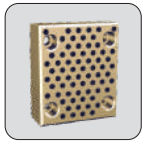

50056
导板
Sliding Pads
Page 52



50057
铸铁导板
Sliding Pads, Steel
Page 53

Contents



50058
导板
Sliding Pads
Page 54



50059
导板
Sliding Pads
Page 55



50060
导板
Sliding Pads
Page 56



50060-1
导板
Sliding Pads
Page 57



50061
导板
Sliding Pads
Page 58



50062
导板
Sliding Pads
Page 59



50063
钢基导板
Sliding Pads, Steel
Page 60



50064
导板
Sliding Pads
Page 61-62



50066
导板
Sliding Pads
Page 63



50067
钢基导板
Sliding Pads, Steel
Page 64



50068
导板
Sliding Pads
Page 65



50069
滑板
Guide Bars
Page 66



50070
滑板
Guide Bars
Page 67



50071
滑板
Guide Bars
Page 68



50072
滑板
Guide Bars
Page 69



50073
滑块
Guide Bars
Page 70



50074
滑块
Guide Bars
Page 71



50075
50075-1
导座 / 外导板
Guide Brackets
Page 72



50076
中间导块
Slide Centre Guides
Page 73



50077
强制复位导向滑块
Cam Forced Return Plates
Page 74



50078
斜锲镶板
Overrun Cams
Page 75



50079
斜锲镶板
Overrun Cams, Steel
Page 76



50080
导板
Sliding pads
Page 77



50081
导板
Sliding pads
Page 78

Contents



50082
导板
Sliding pads
Page 79



50083
导板
Sliding pads
Page 80



50084
导板
Sliding pads
Page 81



50085
导板
Sliding pads
Page 82



50086
导板
Sliding pads
Page 83



50087
导板
Sliding pads
Page 84



50100
L型导板
Angled Guide Gibs
Page 86



50101
L型导板
Angled Guide Gibs
Page 87



50102
L型导板
Angled Guide Gibs
Page 88



50103
L型导板
Angled Guide Gibs
Page 89

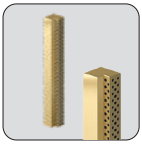

50104
L型导板
Angled Guide Gibs
Page 90



50105
L型导板
Angled Guide Gibs
Page 91



50106
T 型导轨
T-Guide Bars
Page 92

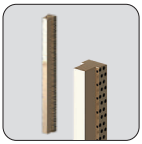

50107
T 型导轨
T-Guide Bars
Page 92



50108
V 型导板
Sliding Blocks
Page 93



50109
V 型导板
Sliding Blocks
Page 93



50110
V 型导板
Sliding Blocks
Page 94



50111
V 型导板
Sliding Blocks
Page 94



50112
V 型导板
Sliding Blocks
Page 95



50113
V 型导板
Sliding Blocks
Page 95



50114
V 型导板
Sliding Blocks
Page 96



50115
V型导板
Sliding Blocks
Page 96



50116
V型导板
Prismatic Guides
Steel
Page 97



50117
V型导板
Prismatic Guides
Page 98

Contents



50700
V型导板, 日本标准
Prismatic Guides, JIS
Bronze with Non-Liquid Lubricant
Page 99



50701
V型导板
prismatic Guides,steeL
Page 99



50 702
V型导板
V Driver
GroupReturn Clamp
Page 100



50118
单棱面导板
Single-sided
Prismatic Guides
Page 101



50119
单棱面导板
Single-sided
Prismatic Guides,
Steel
Page 102



50120
单棱面导板
Single-sided
Prismatic Guides,
Page 103



50121
单棱面导板
Single-sided
Prismatic Guides,
Steel
Page 104

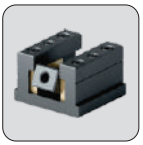

50122
自润滑式活芯组件
/斜顶座
Bolt Guides Slide
Core Gui de Units
Page 105



50123
自润滑式活型芯组件
/斜顶座
Bolt Guides Slide Core
Guide Units
Page 106



50125
L型导板
Angled Guide Gibs
Page 107

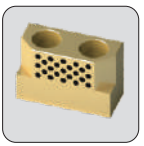

50130
强制拉回
Cam Forced Return
Blo cks
Page 108

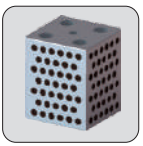

50131
压料器导向滑块
Pad Guide Blocks
Page 109



50150
长型导板
Flat Guide Bars
Page 110



50151
长型导板
Flat Guide Bars
Page 111



50152
导板
Flat Guide Bars
Page 112



50153
斜锲上滑块
Retaining Plates
Page 113



50154
斜锲上滑块
Retaining Plates
Page 114



50155
导板
Flat Guide Bars
Page 115



50156
簿型导板
Flat Guide Bars
Page 116



50157
簿型导板
Flat Guide Bars
Page 117



50160
铁镍烧结自润滑导板
Sliding Pads
Steel Based,Iron
Sinter Lubricating Alloy Layer
Page 118



50161
铁镍烧结自润滑导板,
VDI 3357标准
Sliding Pads, VDI3357,
Steel Based,Iron
Sinter Lubricating
Alloy Layer
Page 119



50162
铁镍烧结自润滑导板,
VDI 3357标准
Sliding Pads, VDI3357,
Steel Based,Iron Sinter
Lubricating Alloy Layer
Page 120



50163
铁镍烧结自润滑导板,
纳姆斯标准
Sliding Pads to NAAMS
Steel Based,Iron Sinter
Lubricating Alloy Layer
Page 121

Contents



50458
中心定位组合件
Central Locating Sets
Page 122

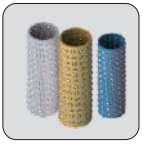

50511 50512 50513
钢球保持架
Ball Retainers
Page 123



50449
翻边举升器
Flange Lifter
Page 124



50601
提升器
Flange Lifters-Fit type
Page 125



50088 50089
外导板
Guide Brackets
Page 126



50462 50465 50463 50464
凹模
Matrixes
Page 127 –129



50470 50473 50471 50472
凸模
Punches
Page 130 –132



50474 50476 50475 50477
球锁紧凸模- 轻载型
Ball-Lock Punches -Light Load
Page 133 –136

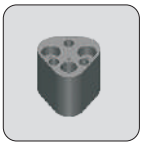

50500 50503 50501 50504 50502 50505
固定座
Retainers
Page 137 –142



50810 50811
弹顶销
Spring Plungers
Page 143



50901 50902
顶针
Ejector Pins
Page 144 – 145



50907 50908
顶针
Ejector pin
Hardened ISO 8694
Page 146 –147



50913 50914
扁顶针
Blade
Ejectors-Hardened
Page 148 –149



50919 50920
司筒
Ejector Sleeves
Page 150 –151



50310
起吊棒
Die Lifting Bolts
Page 152



50311
吊耳
Liftere stud VDI 3366
Page 153

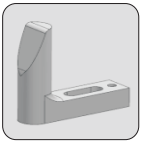

50320
材料导正架
Guide
Page 154



50212 50213
压板
Clamp
for Guide Bushes
Page 155

材料牌号对照表 Material

材料代号 Material codes	NYC05/0 高力合金铜	NYC05/2 高力合金铜	NYC05/3 铸造铝青铜	NYC05/4 铸造锡青铜	NYC05/5 铸造锡青铜	NYC05/6 铸铁
中 国 China brands GB1776-87	ZCuZn25Al6 Fe3Mn3	ZCuZn25Al6 Fe3Mn3	ZCuAl9Fe4 Ni4Mn2	ZCuSn5 Pb5Zn5	ZCuSn10Zn2	GB5675-85 HT250
国 际 Intenational ISO 1338	GCuZn25Al6 Fe3Mn3	GCuZn25Al6 Fe3Mn3	GCuAl10 FeNi5	GCuPb5 Sn5Zn5	GCuSn10Zn2	
德 国 Germany DIN	DIN1709 G-CuZn25Al5	DIN1709 G-CuZn25Al5	DIN17656 G-CuAl10Ni	DIN1705 G-CuSn5ZnPb	DIN1705 G-CuSn10Zn	
日 本 Japan JIS	H5102 HBsC4	H5102 HBsC4	H5114 AlBC3	H5111 BC6	H5111 BC3	FC250
美 国 America ASTM(UNS)	B30-92 C86300	B30-92 C86300	B30-92 C95500	B30-92 C83600	B30-92 C90500	ASTM Class40
英 国 England BS	HTB2	HTB2	AB2	LG2	G1	
法 国 France NF			CuAl10 Fe5Ni5	CuPb5 Sn5Zn5	CuSn12	
适用情况 Applicable conditions	高载荷，低速， 一般用 High-load, low speed, Commonly used	超高载荷，低速， 高承载用 Over high load, low speed, High load used	中载荷，中速， 一般用 Mid-load, mid-speed, Commonly used	中载荷，低速 Mid-load, low speed	中载荷，低速 Mid-load, low speed	中载荷，低速 Mid-load, low speed

Oilless Guide Elements with embedded solid lubricants are used in applications of linear or rotary motion in tool making, general machine construction and similar engineering uses. The structure of the base material provides closely spaced deposits of solid lubricant - properties and specifications as per table below.

The elements satisfy highest demands in terms of load earing capacity at low sliding speeds, within an extensive temperature band.

The lubricant deposits are arranged in staggered geometrical patterns, thus ensuring optimal lubrication effect along the sliding motion, especially with counter bearings which are hardened and ground.

The sliding surfaces should be lightly greased with lithium grease emulsion, prior to commissioning.

On flat guideways and pillar guides, from 25 to 30 per cent of the sliding surfaces consist of lubricant deposits. Surfaces of counter bearings must have a ground finish, preferably with a lay parallel with the sliding motion.

Choice of Element- Type

Standard:

- for general uses at temperatures up to 200 °C

Special Types on request

Advantages of Oilless Guide Elements

- good emergency sliding properties
- highest carrying capacity at low speed
- use under water or with chemical solutions
- extremely wide temperature resistance - hot and cold
- damping properties in presence of vibration

PV value

The permissible bearing load is determined from the pressure and the PV value, which defines the bearing wear.
The PV value is the product of surface pressure (P) and running velocity (V).
The permissible bearing load is determined from the
PV value.
$PV = P \times V$ (N/cm^2 × m/min.)
$P = F/A$ (N/cm^2)
F = max. load (N)
A = projected area of the bearing

Surface pressure, temperature, speed and lubrication

最大承载力 Surface pressure max. (N/cm^2)	温度 Temp. (°C)	滑动速度 Speed (m/min)	PV值 PV value (N/cm^2 × m/min)	润滑 Lubrication
5000	80	15	10 000	Initial
3000	150	60	20 000	Pressure lubrication

Oilless Guide Elements - Material Data

Chemical composition %	Cu 60~80	elongation %	12
	Al 3.0~7.5	modulus of elasticity kN/mm^2	105~115
	Fe 2.0~4.0	stroking velocity m/min	15
	Mn 2.5~5.0	co-efficient of friction	0.04~0.10
	Balance: Zn	temperature conductance W/(m×k)	45~55
Specific density kg/dm^3	8.2	temperature resistance °C	+300
Tensile strength Rm N/mm^2	770	co-efficient of thermal expansion	1.6~2.0×10-5/°C
brinell hardness HB 10	180~210	co-efficient of shrinkage %	1.8~2.3
shear strength N/mm^2	560	electric conductance m/(Ω ×mm^2)	7~8
yield limit Rp 0.2 N/mm^2	450	alt. flexural strength N/mm^2	±150
elongation to fracture A5 %	8	ratio sliding surface to lubricant deposits (%)	25~30

NYC

50001

固体自润滑导套/轴承
Oilless Guide Bushes
Bronze with Non-Liquid Lubricant



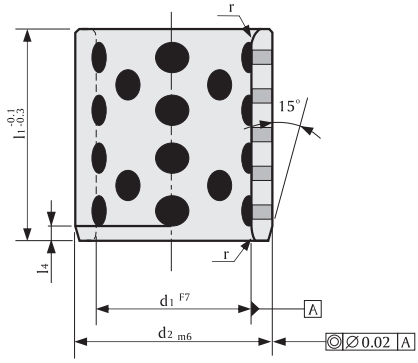



Direction of Motion
Embedded non-liquid lubricant
(section)

材质 Material

高力黄铜
Bronze with Non-Liquid Lubricant.
Oilless lubricating.

注意 Note:

Recommended fits for:
Press fits: H 7 bore
(if required secure with set screw).

Notice:

Note that press fitment reduces inside bush diameter.

Bushes can be used with radial or axial motion.

50001.

d_1	d_2	r	l_4	l_1
8	12	0.5	2	● ●/-
10	14/15	0.5	2	● ●/●
12	18	0.5	2	● ●/-
15	19	0.5	2	● ●/-
16	20	0.5	2	●
20	24	0.75	2	● ●/-
25	26/28/30	0.75	4	-/●/-
30	32	0.75	4	-/●/●
35	32/33/35	0.75	4	-/●/●
37	38	0.75	4	●
40	38/40/42	0.75	4	● ●/-
47	40	0.75	4	● ●/-
50	42	0.75	4	● ●/-
60	44/45	0.75	4	-/●
70	45	1	2	●
77	48	1.5	4	● ●/-
80	50/55	1.5	4	●/-
115				
145				
170				

订单方式 Ordering Code (example):

Guide bushes	=	50001.
d1=40 mm	=	040.
d2=50 mm	=	050.
l_1 =60 mm	=	060
Order No	=	50001.040.050.060

NYC

50001

固体自润滑导套/轴承
Oilless Guide Bushes
Bronze with Non-Liquid Lubricant

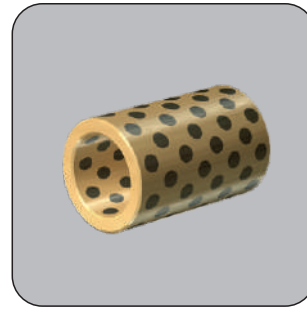

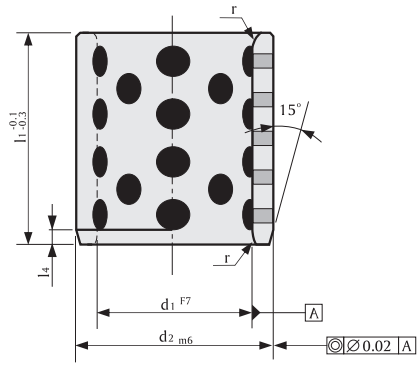



运动方向
Direction of Motion
Embedded non-liquid lubricant
(section)

材质 Material

高力黄铜
Bronze with Non-Liquid Lubricant.
Oilless lubricating.

注意 Note:

Recommended fits for:
Press fits: H 7 bore
(if required secure with set screw).

Notice:

Note that press fitment reduces inside bush diameter.

Bushes can be used with radial or axial motion.

50001.

d_1	45	50	55	60	63	65	70	75	80	85	90	100	110	120	125	130	140	150	160
d_2	55/56/60	60/62/65	70	74/75	75	80	85/90	90/95	96/100	100	110	120	130	140	145	150	160	170	180
r	1.5	1.5	2	2	2	2	2	2	2	2	2	2	2	2	2	2	2	2	2
l_4	4	4	4	4	4	4	4	4	4	4	4	4	4	4	4	4	4	4	4
l_1																			
30	●/●/●	●/●/●		●/●															
35	●/●/●	●/●/-		●/●			●/-												
37																			
40	●/●/●	●/●/●	●	●/●			●/-		●/●										
47																			
50	●/●/●	●/●/●	●	●/●		●	●/●		●/●										
60	●/●/●	●/●/●	●	●/●	●	●	●/●	●/●	●/●		●	●							
70	-/-/●	●/●/●	●	●/●	●	●	●/●	●/●	●/●		●	●							
77																			
80	-/-/●	●/-/●		●/●	●	●	●/●	●/●	●/●	●	●	●	●	●					
95		●/-/-																	
100		-/-/●		-/●			●/-	●/●	●/●		●	●	●	●	●	●	●	●	●
120					●				●/●		●	●	●	●	●	●			
130																●			
140									-/●			●		●			●		
150																		●	●

订单方式 Ordering Code (example):

Guide bushes	=	50001.
d1=40 mm	=	040.
d2=50 mm	=	050.
l_1 =60 mm	=	060
Order No	=50001.040.050.060	

NYC

50001-1

固体特殊自润滑导套
Oilless Guide Bushes
Bronze with Non-Liquid Lubricant

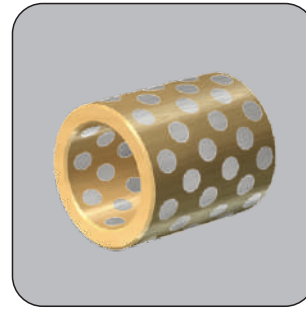

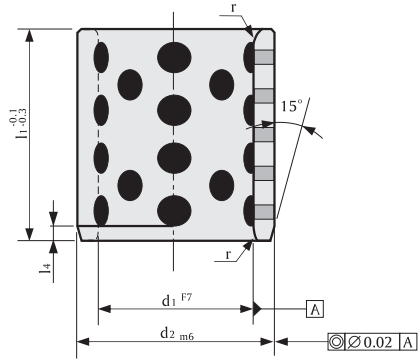



Direction of Motion
Embedded non-liquid lubricant
(section)

材质 Material

高力黄铜
Bronze with Non-Liquid Lubricant.
Oilless lubricating.

注意 Note:

Recommended fits for:
Press fits: H 7 bore
(if required secure with set screw).

Notice:

Note that press fitment reduces inside bush diameter.

Bushes can be used with radial or axial motion.

50001-1.

d_1	8	10	12	13	14	15	16	18	19	20	24	25	28	30	31.5	32	35	36	38	40
d_2	12	14/15	18	19	20	21	22	24	25	26/28/30	32	32/33/35	38	38/40/42	40	42	44/45	45	48	50/55
r	0.5	0.5	0.5	0.5	0.5	0.75	0.75	0.75	0.75	0.75	0.75	0.75	0.75	0.75	0.75	0.75	0.75	1	1.5	1.5
l_4	2	2	2	2	2	2	2	2	2	4	4	4	4	4	4	4	4	2	4	4
l_1																				
8	●	●/ -																		
10	●	●/●	●	●	●		●													
12	●	●/ -	●		●	●	●													
15	●	●/ -	●	●	●	●	●	●		- /●/ -										
16			●	●		●	●	●		- /●/●		- /●/●								
20		●/ -	●	●	●	●	●	●		- /●/●		- /●/●		●/●/ -			- /●			●/ -
25			●		●	●	●	●		- /●/●		- /●/●		●/●/ -			●/●			●/●
30			●		●	●	●	●		- /●/●		- /●/●	●	●/●/ -	●	●	●/●		●	●/●
35							●	●		- /●/●		- /●/●		●/●/ -			●/●			●/●
37									●	- /●/ -										
40							●	●		●/●/●		- /●/●	●	●/●/ -	●	●	●/●		●	●/●
47											●	- /●/ -								
50										- /●/ -		●/●/●		●/●/ -			●/●			●/●
60												- /●/ -		●/●/●		●	●/●			●/●
70																				●/ -
77																			●	●/ -
80																				●/ -
115																		●		
145																		●		
170																		●		

订单方式 Ordering Code (example):

Guide bushes	=50001-1.	
d1=40 mm	=	040.
d2=50 mm	=	050.
l_1 =60 mm	=	060
Order No	=50001-1.040.050.060	

NYC

50001-1

固体特殊自润滑导套
Oilless Guide Bushes
Bronze with Non-Liquid Lubricant

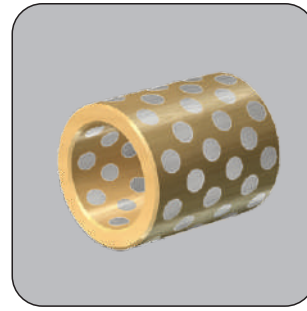

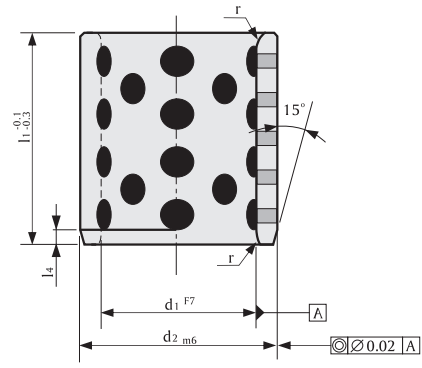



运动方向
Direction of Motion
Embedded non-liquid lubricant
(section)

材质 Material

高力黄铜
Bronze with Non-Liquid Lubricant.
Oilless lubricating.

注意 Note:

Recommended fits for:
Press fits: H 7 bore
(if required secure with set screw).

Notice:

Note that press fitment reduces inside bush diameter.

Bushes can be used with radial or axial motion.

50001-1.

d_1	45	50	55	60	63	65	70	75	80	85	90	100	110	120	125	130	140	150	160
d_2	55/56/60	60/62/65	70	74/75	75	80	85/90	90/95	96/100	100	110	120	130	140	145	150	160	170	180
r	1.5	1.5	2	2	2	2	2	2	2	2	2	2	2	2	2	2	2	2	2
l_4	4	4	4	4	4	4	4	4	4	4	4	4	4	4	4	4	4	4	4
l_1																			
30	●/●/●	●/●/●		●/●															
35	●/●/●	●/●/-		●/●			●/-												
37																			
40	●/●/●	●/●/●	●	●/●			●/-		●/●										
47																			
50	●/●/●	●/●/●	●	●/●		●	●/●		●/●										
60	●/●/●	●/●/●	●	●/●	●	●	●/●	●/●	●/●		●	●							
70	-/-/●	●/●/●	●	●/●	●	●	●/●	●/●	●/●		●	●							
77																			
80	-/-/●	●/-/●		●/●	●	●	●/●	●/●	●/●	●	●	●	●	●					
95		●/-/-																	
100		-/-/●		-/●			●/-	●/●	●/●		●	●	●	●	●	●	●	●	●
120					●				●/●		●	●	●	●	●	●			
130																●			
140									-/●			●		●			●		
150																		●	●

订单方式 Ordering Code (example):

Guide bushes	=	50001-1.
d1=40 mm	=	040.
d2=50 mm	=	050.
l_1 =60 mm	=	060
Order No	=50001-1.040.050.060	

NYC

50001-2

绝缘自润滑衬套
Plastic insulation Bushes
Bronze with Non-Liquid Lubricant



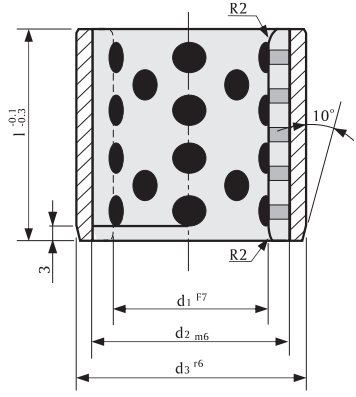



运动方向
Direction of Motion
Embedded non-liquid lubricant
(section)

材质 Material

绝缘塑料+铜合金
Plastic insulation+Bronze with
Non-Liquid Lubricant.
Oilless lubricating.

50001-2.

d_1	20	25	25	30	30	30 H6
l	20	25	30	15	30	24
d_2	28	33	33	38	38	37
d_3	32	37	37	42	42	44 n6

订单方式 Ordering Code (example):

Guide bushes	=	50001-2.
d1=20 mm	=	020.
l=20 mm	=	020
Order No	=	50001-1.020.020.

NYC

50002

止推垫片
Thrust Washers
Bronze with Non-Liquid Lubricant

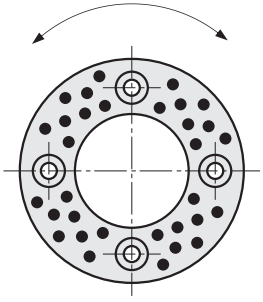

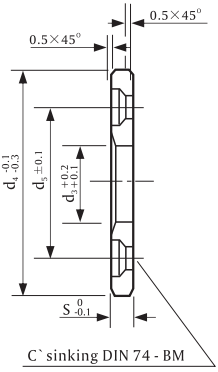

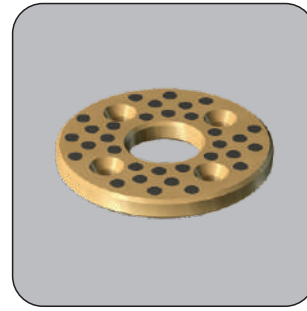

材质 Material

高力黄铜
Bronze with Non-Liquid Lubricant.
Oilless lubricating.

注意 Note:

For combination loads use
together with Bushes 50001

适配 Fixing:

From d_3 = 10.2 2×M3
From d_3 = 20.2 2×M5
From d_3 = 40.2 2×M6
From d_3 = 50.3 4×M6
From d_3 = 60.3 4×M8
From d_3 = 90.5 4×M10

Screws not included.



运动方向
Direction of Motion
Embedded non-liquid lubricant
(section)

50002.

d_3	10.2	12.2	13.2	16.2	18.2	20.2	25.2	30.2	35.2	40.2	45.3	50.3	55.3	60.3	65.3	70.3	80.3	90.5	100.5	120.5
d_4	30	40	40	50	50	50	55	60	70	80	90	100	110	120	125	130	150	170	190	200
d_5	20	28	28	28	35	35	40	45	50	60	67.5	75	85	90	95	100	120	140	160	175
s	3	3	3	3	3	5	5	5	5	7	7	8	8	8	8	10	10	10	10	10
BM	3	3	3	3	3	5	5	5	5	6	6	6	6	8	8	8	8	10	10	10

订单方式 Ordering Code (example):

Thrust Washer=50002.
d3 = 20.2 mm = 020
Order No =50002.020

NYC

50003

边法兰导套
Oilless Guide Bushes with collar
Bronze with Non-Liquid Lubricant

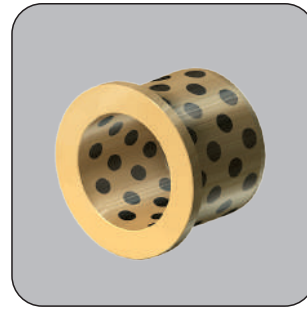

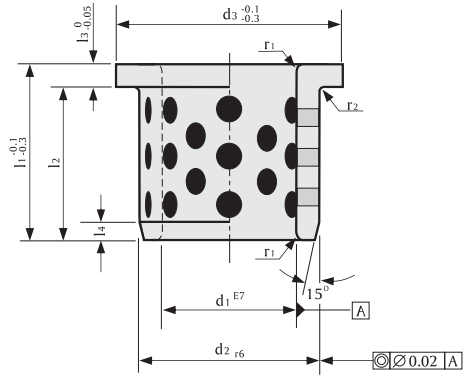



运动方向
Direction of Motion
Embedded non-liquid lubricant
(section)

材质 Material

高力黄铜
Bronze with Non-Liquid Lubricant.
Oilless lubricating.

注意 Note:

Fit for receiving bore : H 7

Notice:

Bushes can be used with radial or axial motion.

50003.

d_1	10	12	13	14	15	16	20	25	30	31.5	35	40	45	50	55	60	63	70	75	80	90	100	120
d_2	14	18	19	20	21	22	30	35	40	40	45	50	55	60	65	75	75	85	90	100	110	120	140
d_3	22	25	26	27	28	29	40	45	50	50	60	65	70	75	80	90	85	105	110	120	130	150	170
l_3	2	3	3	3	3	3	5	5	5	5	5	5	5	5	5	7.5	7.5	7.5	7.5	10	10	10	10
l_4	2	2	2	2	2	2	3	3	3	3	3	3	3	3	3	4	4	4	4	4	4	4	4
r_1	1	1	1	1	1	1	2	2	2	2	2	2	2	2	2	3	3	3	3	3	3	3	3
r_2	0.4	0.4	0.4	0.4	0.5	0.5	0.5	0.5	0.5	0.6	0.6	0.6	0.6	0.6	0.7	0.7	0.7	0.7	0.7	0.8	0.8	0.8	0.8
l_1	l_2																						
15	13	12	12	12	12	12	10	10															
20	18	17	17	17	17	17	15	15	15	15	15	15											
25					22	22	20	20	20														
30					27	27	25	25	25		25	25	25	25									
35									30	30													
40							35	35	35		35	35	35	35	35	32.5							
50									45		45	45	45	45		42.5		42.5					
60													55	55	55				52.5	50	50		
67.5																	60						
80																72.5		72.5		70	70	70	70
100																				90		90	90

订单方式 Ordering Code (example):

Guide bush =50003.
d_1=16 mm = 016.
l_1 = 30 mm = 030
Order No =50003.016.030

NYC

50004

边法兰导套
Oilless Guide Bushes with collar
Bronze with Non-Liquid Lubricant



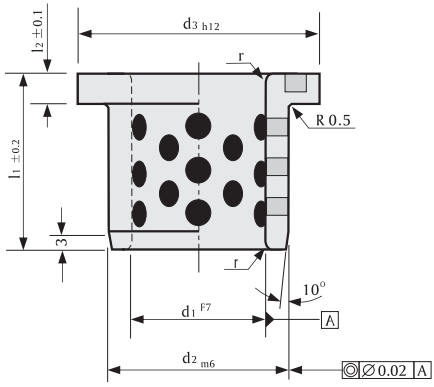



运动方向
Direction of Motion
Embedded non-liquid lubricant
(section)

材质 Material

高力黄铜
Bronze with Non-Liquid Lubricant.
Oilless lubricating.

注意 Note:

Fit for receiving bore : H 7

Notice:

Bushes can be used with radial or axial motion.

50004.

d_1	12	16	20	25	30	40	50	60
d_2	18	22	28	33	38	50	62	75
d_3	25	30	36	43	48	60	75	90
r	1	1	1	1	1	2	2	3
l_1	15	20	25	30	35	45	55	65
l_2	4	5	5	5	5	5	6	7

订单方式 Ordering Code (example):

Guide bush =50004.
d_1=16 mm = 016.
l_1 = 25 mm = 025
Order No =50004.016.025

NYC

50005

边法兰导套
Oilless Guide Bushes with collar
Bronze with Non-Liquid Lubricant

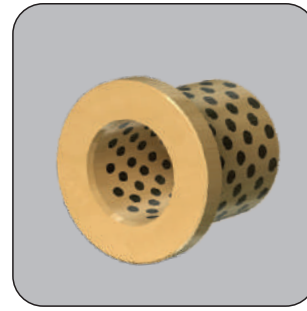

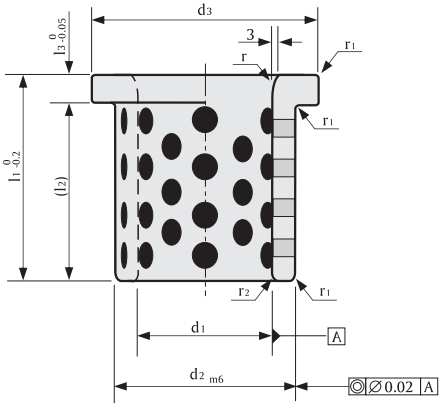



运动方向
Direction of Motion
Embedded non-liquid lubricant
(section)

材质 Material

高力黄铜
Bronze with Non-Liquid Lubricant.
Oilless lubricating.

注意 Note:

Fit for receiving bore : H 7

50005.

d_1	25	30	40	50	60	65	80	100
d_2	35	40	55	65	75	80	100	120
d_3	45	50	65	75	85	90	110	130
r	10	20	20	20	20	20	20	20
r_1	1	1	2	2	2	2	2	2
r_2	2	2	2	2	2	2	2	3
l_3	7	10	10	10	10	10	10	10
l_2	33	40	60	70	70	70 110	90 130	90 130
l_1	40	50	70	80	80	80 120	100 140	100 140

订单方式 Ordering Code (example):

Guide bush =50005.
d_1=25 mm = 025.
l_1 = 40 mm = 040
Order No =50005.025.040

NYC

50006

中法兰导套
Oilless Guide Bushes with collar
Bronze with Non-Liquid Lubricant



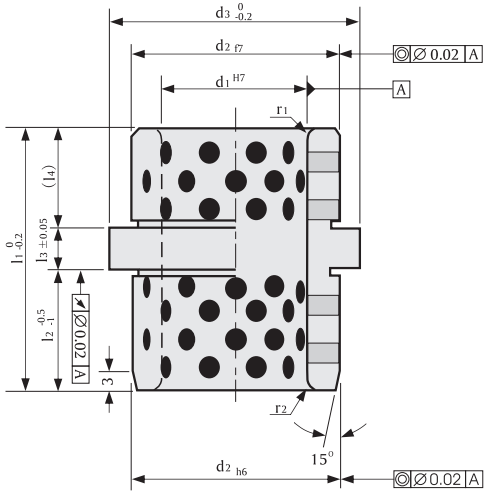



运动方向
Direction of Motion
Embedded non-liquid lubricant
(section)

材质 Material

高力黄铜
Bronze with Non-Liquid Lubricant.
Oilless lubricating.

注意 Note:

Fit for receiving bore : H 7

50006.

d_1	25	30	40		50		60	63		
d_2	35	42	50		63		80	80		
d_3	40	47	60		72		86	90		
r_1	3	3	4		4		3	4		
r_2	2	2	2		3		3	3		
l_4	11.5	11.5	18.5	18.5	24.5	28.5	21.5	31.5	29.5	37.5
l_3	7.5	7.5	6		8		7.5	8		
l_2	24	24	35.5	39.5	44.5	55.5	49	55.5	62.5	62.5
l_1	43	43	60	64	77	92	78	95	100	108

订单方式 Ordering Code (example):

Guide bush =50006.
d_1=25 mm = 025.
l_1 = 43 mm = 043
Order No =50006.025.043

NYC

50007

中法兰导套（ 注塑模），哈斯高标准
Oilless Guide Bushes with collar
Bronze with Non-Liquid Lubricant

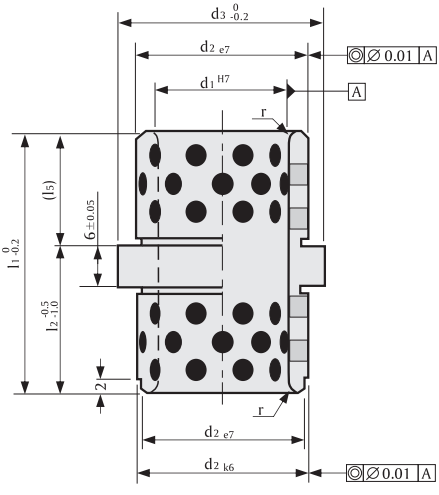



运动方向
Direction of Motion
Embedded non-liquid lubricant
(section)

材质 Material

高力黄铜
Bronze with Non-Liquid Lubricant.
Oilless lubricating.

注意 Note:

Fit for receiving bore : H 7

50007.

d_1	14	15	18	20	22	24	30	32
d_2	20		26		30		42	
d_3	25		31		35		47	
r	1		1.5		2		2	
l_1	26		39		49		63	
l_2	17		22		27		36	
l_5	9		17		22		27	

订单方式 Ordering Code (example):

Guide bush	=50007.
d_1=20 mm	= 020.
l_1 = 39 mm	= 039
Order No	=50007.020.039

NYC

50008

中法兰导套（ 注塑模），哈斯高标准
Oilless Guide Bushes with collar
Bronze with Non-Liquid Lubricant

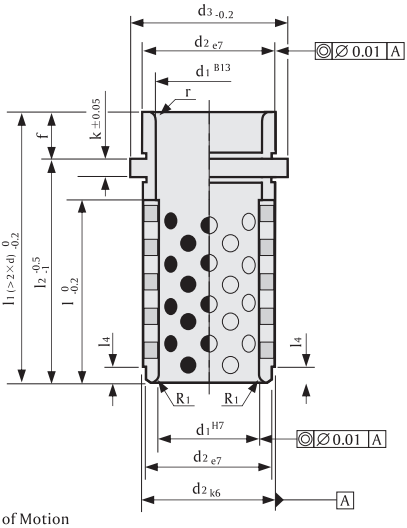

运动方向
Direction of Motion
Embedded non-liquid lubricant
(section)



材质 Material

高力黄铜
Bronze with Non-Liquid Lubricant.
Oilless lubricating.

50008.

d_1	9/10	14/15	18/20	22/24	30/32	40/42
d_2	14	20	26	30	42	54
d_3	16	25	31	35	47	60
f	5	6	8	8	8	10
k	3	6	6	6	6	10

l_2	l / l_1					
12	- /17					
17	- /22	- /23	-/25			
22	20/27	- /28	-/30	-/30		
27	20/32	- /33	-/35	-/35	-/35	
36	20/41	28/42	30/44	36/44	-/44	
46	20/51	30/52	40/54	36/54	-/54	- / 56
56	20/61	30/62	40/64	49/64	-/64	- / 66
66	20/71	30/72	40/74	49/74	54/74	- / 76
76		30/82	40/84	49/84	64/84	- / 86
86		30/92	40/94	49/94	64/94	76/ 96
96			40/104	49/104	64/104	80/106
116			40/124	49/124	64/124	80/126
136				49/144	64/144	80/146
156				49/164		80/166
196						80/206

订单方式 Ordering Code (example):

Guide bush	=50008.
d_1=18 mm =	018.
l_2 = 27 mm =	027
Order No	=50008.018.027

NYC

50009

边法兰导套（注塑模），哈斯高标准
Oilless Guide Bushes with collar
Bronze with Non-Liquid Lubricant

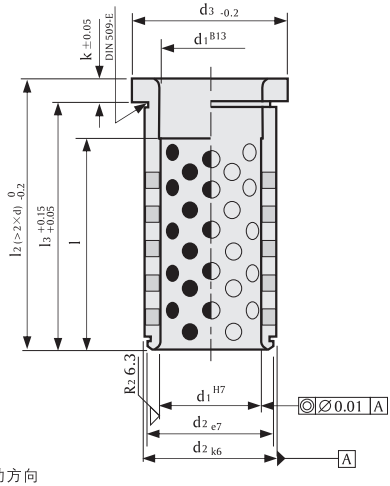

运动方向
Direction of Motion
Embedded non-liquid lubricant
(section)



材质 Material

高力黄铜
Bronze with Non-Liquid Lubricant.
Oilless lubricating.

注意 Note:

Fit for receiving bore : H 7

50009.

d_1	9/10	12	14/15	16	18/20	22/24	30/32	40/42
d_2	14	18	20	22	26	30	42	54
d_3	16	23	25	27	31	35	47	60
k	3	6	6	6	6	6	6	10

l_2	l_3 / l							
12	6.6 / -							
17	11.6 / -	8.3 / -	8.3 / -		8.3 / -			
22	16.6 / -	13.3 / -	13.3 / -	13.3 / -	13.3 /-	12.6 / -		
27	21.6 / 20	18.3 / -	18.3 / -	18.3 / -	18.3 / -	17.6 /-	15.85 / -	
36	30.6 / 20	27.3 / 24	27.3 / 28	27.3 / 27	27.3 / -	26.6 / -	24.85 /-	
46	40.6 / 20	37.3 / 24	37.3 / 30	37.3 / 32	37.3 / 40	36.6 / 36	34.85 / -	30.15 / -
56	50.6 / 20	47.3 / 24	47.3 / 30	47.3 / 32	47.3 / 40	46.6 / 48	44.85 / -	40.15 /-
66					57.3 / 40	56.6 / 48	54.85 / 54	50.15 / -
76					67.3 / 40	66.6 / 48	64.85 / 64	60.15 / -
86						76.6 / 48	74.85 / 64	70.15 / 76
96						86.6 / 48	84.85 / 64	80.15 / 80
116							104.9 / 64	100.15 / 80
136								120.15 / 80
156								
196								

订单方式 Ordering Code (example):

Guide bush =	**50009**.
d_1 = 18 mm =	018.
l_2 = **27mm** =	**027**
Order No	=50009.018.027

NYC

50010

中法兰导套, 奥迪39D860/欧宝U2802-95标准
AUDI39D860/OPEL U2802-95
Oilless Guide Bushes with collar toDIN 9834/ ISO 9448 Bronze with Non-Liquid Lubricant

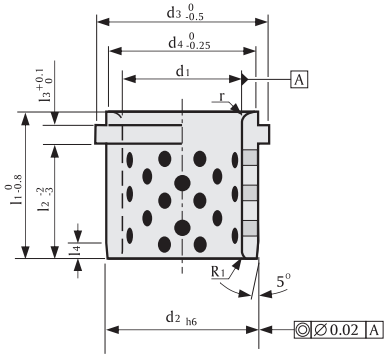

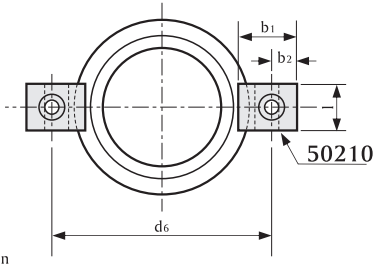

运动方向
Direction of Motion
Embedded non-liquid lubricant
(section)



材质 Material

高力黄铜
Bronze with Non-Liquid Lubricant.
Oilless lubricating.

注意 Note:

Special Guide pillars
50045 to DIN 9833/ISO 9182-3
Fit for receiving bore : H 7

Screw Clamps (incl. screws)

to order separate
up to d1=52 (M6 ×16 DIN EN ISO 4762)
from d1=60 (M10 ×20
DIN EN ISO 4762)

50010.

d_1	24/25	30/32	38/40/42*	48/50/52*	60/63	80	100	125	160
d_2	32	40	50	63	80	100	125	160	200
d_3	40	50	63	71	90	112	140	180	220
d_4	32	40	50	63	80	100	125	160	200
d_6	58	66	79	89	123	143	168	203	243
d_7	7	7	7	7	11.5	11.5	11.5	11.5	11.5
l_1	40	50	63	71	80	100	125	160	200
l_2	32	40	50	56	63	80	106	132	170
l_3	6.3	6.3	6.3	6.3	10	10	10	10	10
l_4	3	4	5	6.3	8	10	12.5	16	16
l	20	20	20	20	32	32	32	32	32
b_1	20	20	20	20	32	32	32	32	32
b_2	7.5	7.5	7.5	7.5	11	11	11	11	11
h	10	10	10	10	16	16	16	16	16
r	3	3	3	5	6	8	10	12	18

* Phasing out

订单方式 Ordering Code (example):

Guide bush =50010.
d_1=40 mm = 040.
Order No =50010.040

NYC

50011

中法兰导套,纳姆斯G61/福特WDX1360/欧宝U2802-99A标准
G61/FORD WDX 1360/OPEL U2802-99(A)
Oilless Guide Bushes with collar to NAAMS
Bronze with Non-Liquid Lubricant



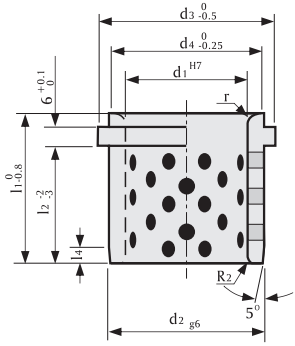

Screw clamps

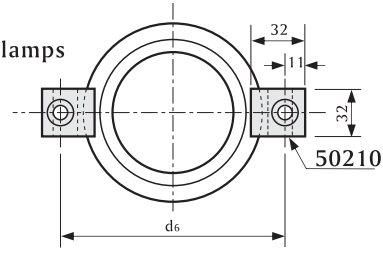

运动方向
Direction of Motion
Embedded non-liquid lubricant
(section)

材质 Material

高力黄铜
Bronze with Non-Liquid Lubricant.
Oilless lubricating.

注意 Note:

Special Guide pillars
50040 to AFNOR.
50045 to DIN 9833/ISO 9182-3
Fit for receiving bore : H 7

Screw Clamps (incl. screws)

to order separate
M10 ×20 DIN EN ISO 4762

50011.

d_1	25	32	40	50	63	80	100	125
d_2	32	40	50	63	80	100	125	160
d_3	40	50	63	71	90	112	140	180
d_4	32	40	50	63	80	100	125	160
d_6	75	83	93	106	123	143	168	208
l_1	40	50	63	71	80	100	125	160
l_2	30	40	50	56	63	80	106	132
l_4	4	4	5	6	8	10	12	12
r	3	3	3	5	6	8	10	12

订单方式 Ordering Code (example):

Guide bush =50011.
d_1=25 mm = 025
Order No =50011.025

NYC

50012

边法兰导套，纳姆斯G71/福特WDX1380标准
G71/ FORD WDX 1380
Oilless Guide Bushes with collar to NAAMS
Bronze with Non-Liquid Lubricant

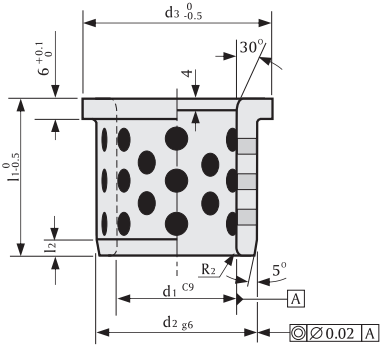

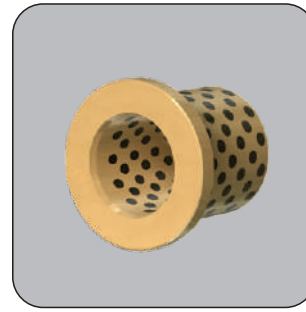

材质 Material

高力黄铜
Bronze with Non-Liquid Lubricant.
Oilless lubricating.

注意 Note:

Fit for receiving bore : H 6

Screw Clamps (incl. screws)

to order separate
M8 ×20 DIN EN ISO 4762

Screw clamps

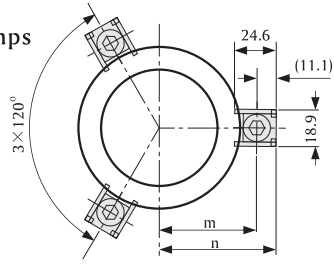



运动方向
Direction of Motion
Embedded non-liquid lubricant
(section)

50012.

d_1	25	32	40	50	63	80	100	125
d_2	32	40	50	63	80	100	125	160
d_3	40	50	63	71	90	112	140	180
l_1	40	50	55	63	75	90	115	138
l_2	4	4	5	6	8	10	12	12
m	25	34	40.5	44.5	54	65	79	99
n	36.1	45.1	51.6	55.6	65.1	76.1	90.1	110.1

订单方式 Ordering Code (example):

Guide bush	=50012.
d_1=40 mm	= 040.
Order No	=50012.040

NYC

50013
50014

边法兰导套 法国标致雪铁龙标准
PSA. E24.52.128.G/PSA.E24.52.125.G
Guide Bushes with collar to AFNOR,
Bronze with Non-Liquid Lubricant
Guide Bushes with collar to AFNOR, Bronze

50013

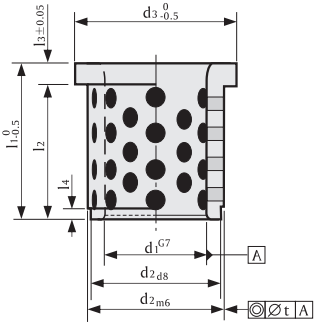

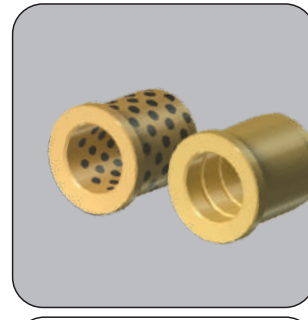

50014

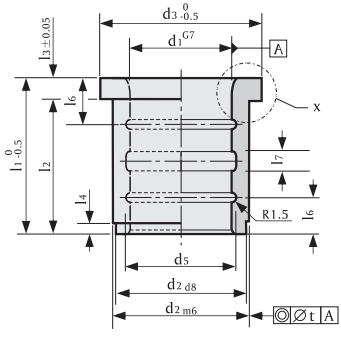



运动方向
Direction of Motion
Embedded non-liquid lubricant
(section)

Detail-x to⌀ d ≤40

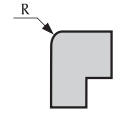

Detail-x to⌀ d >40

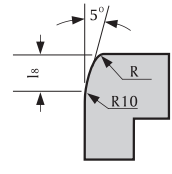

50013.
50014.

d_1	25	32	40	50	63	80	100
d_2	35	44	52	63	80	100	125
d_3	40	50	60	71	90	112	140
d_4	72	80	100	125	140	180	200
d_5	27	34	42	52	65	82	102
d_7	7	7	7	9	11.5	14	14
l_1	40	50	63	80	100	125	160
l_2	35	44	55	70	88	109	140
l_3	5	6	8	10	12	16	20
l_4	5	8	8	8	10	10	10
l_6	-	12	16	20	25	32	40
l_7	5	5	8	10	12	16	20
h	10	12	12	16	20	25	32
e_1	20	25	38.5	46	55	70	81
e_2	20	21	14	17	17	20	25
e_3	-	-	41	49	57.5	72	85
t	0.01	0.01	0.02	0.02	0.02	0.02	0.02
R	2	3	3	3	3	4	4
l_8	-	-	-	8	10	10	10

订单方式 Ordering Code (example):

Guide bush =50013.	Guide bush =50014.
d_1=40 mm = 040	d_1=40 mm = 040
Order No =50013.040	Order No =50014.040

材质 Material

50013
高力黄铜
Bronze with Non-Liquid
Lubricant. Oilless lubricating.

50014
Bronze.

注意 Note:

Special Guide pillars
50040 to AFNOR.
50045 to DIN 9833/ISO 9182-3
Fit for receiving bore : H 6

Retaining Flange (screws incl.)

to order separate
d_1=25 (M6 ×16 DIN EN ISO 4762)
d_1=32 (M6 ×16 DIN EN ISO 4762)
d_1=40 (M6 ×16DIN EN ISO 4762)
d_1=50 (M8 ×20 DIN EN ISO 4762)
d_1=63 (M10 ×25 DIN EN ISO 4762)
d_1=80 (M12 ×30 DIN EN ISO 4762)
d_1=100 (M12 ×30 DIN EN ISO 4762)

NYC

50015

导套, 标致雪铁龙标准
PSA .E24.52.125.G
Oilless Guide Bushes , Bronze

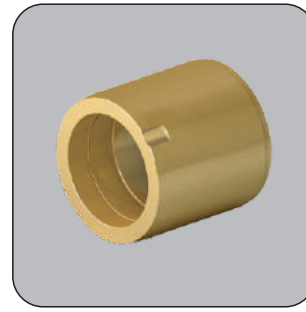

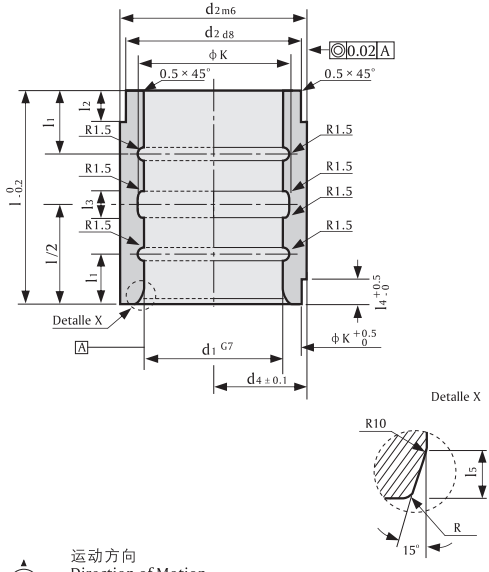

运动方向
Direction of Motion
Embedded non-liquid lubricant
(section)

材质 Material
高力黄铜
Bronze

注意 Note:
Fit for receiving bore : G 7

50015.

d_1	63	80	100
d_2	80	100	125
ϕ K	25(2 a 180°)	25(2 a 180°)	25(2 a 180°)
l	100	125	160
l_1	25	32	40
l_2	8	10	10
l_3	12	16	20
l_4	17	17	17
l_5	10	10	10
d_4	50	60	72.5
R	3	4	4

订单方式 Ordering Code (example):

Guide bush =50015.
d_1=50 mm = 050.
l = 50 mm = 050
Order No =50015.050.050

NYC

50016
50017

导套，铜基/铸铁基，日本标准
Oilless Guide Bushes
Bronze with Non-Liquid Lubricant
Steel with Non-Liquid Lubricant

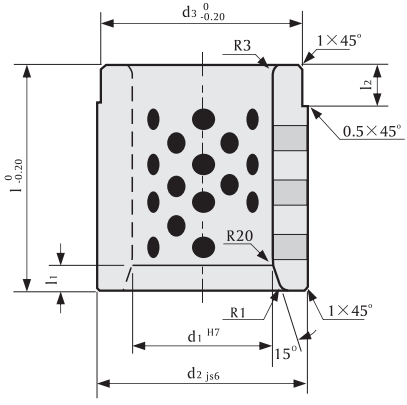

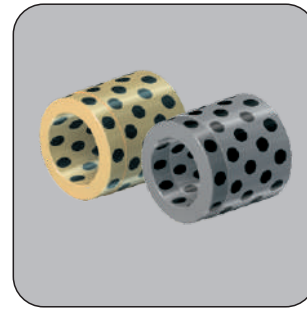

运动方向
Direction of Motion
Embedded non-liquid lubricant
(section)

材质 Material

50016
高力黄铜
Bronze with Non-Liquid Lubricant.
Oilless lubricating.

50017
铸铁基 FC250
Steel with Non-Liquid Lubricant.
Oilless lubricating.

注意 Note:

Fit for receiving bore : H 7

50016.
50017

d_1	30	40	50	60	80	100	120
d_2	50	60	70	80	100	120	140
d_3	49	59	69	79	99	119	139
l	50	60	75	90	120	150	180
l_2	10	10	15	20	25	25	25
l_1	5	5	5	10	10	10	10

订单方式 Ordering Code (example):

Guide bush =50016.	Guide bush =50017.
d_1=30 mm = 030.	d_1=50 mm = 050.
l = 50 mm = 050	l = 75 mm = 075
Order No =50016.030.050	Order No =50017.050.075

NYC

50018
50019

中法兰导套（ 大小头）
Oilless Guide Bushes with collar
Bronze with Non-Liquid Lubricant

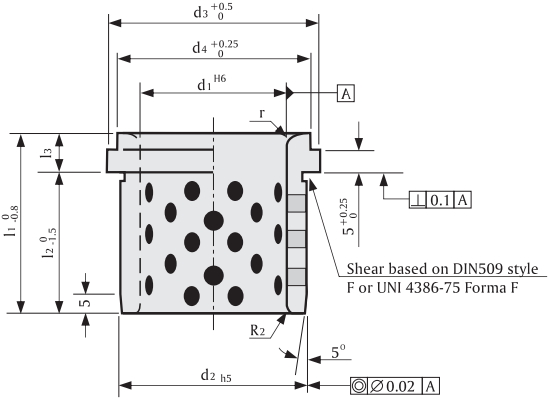



运动方向
Direction of Motion
Embedded non-liquid lubricant
(section)

材质 Material

高力黄铜
Bronze with Non-Liquid Lubricant.
Oilless lubricating.

注意 Note:

Fit for receiving bore : H 7

50018.

d_1	18/19	24/25	30/32	40/42	50/52	63	80
d_2	28	38	45	54	65	81	100
d_3	34	44	53	63	79	92	111
d_4	29	39	48	58	74	87	106
l_3	13	13	13	13	13	13	13
l_1	31	36	43	51	61	74	91
l_2	18	23	30	38	48	61	78
r	3	3	3	3	4	5	6

50019.

d_1	18/19	24/25	30/32	40/42	50/52	63
d_2	28	38	45	54	65	81
d_3	34	44	53	63	79	92
d_4	29	39	48	58	74	87
l_3	13	13	13	13	13	13
l_1	50	55	60	67	75	90
l_2	37	42	47	54	62	77
r	3	3	3	3	4	5

订单方式 Ordering Code (example):

Guide bush =50018.	Guide bush =50019.
d_1=40 mm = 040	d_1=40 mm = 040
Order No =50018.040	Order No =50019.040

NYC

50020
50021
50022

中法兰导套（ 大小头）
Oilless Guide Bushes with collar
Bronze with Non-Liquid Lubricant

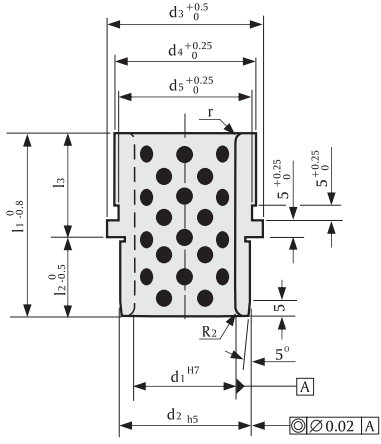

运动方向
Direction of Motion
Embedded non-liquid lubricant
(section)



材质 Material

高力黄铜
Bronze with Non-Liquid Lubricant.
Oilless lubricating.

注意 Note:

Fit for receiving bore : H 7

50020.

d_1	18/19	24/25	30/32	40/42	50/52	63	80
d_2	28	38	45	54	65	81	100
d_3	34	44	53	63	79	92	111
d_4	31	41	50	60	76	89	108
d_5	29	39	48	58	74	87	106
l_3	32	32	34	37	40	42	52
l_1	50	55	60	67	75	90	100
l_2	18	23	26	30	35	48	48
r	3	3	3	3	4	5	6

50021.

d_1	18/19	24/25	30/32	40/42	50/52	63	80
d_2	28	38	45	54	65	81	100
d_3	34	44	53	63	79	92	111
d_4	31	41	50	60	76	89	108
d_5	29	39	48	58	74	87	106
l_3	52	57	64	70	75	82	102
l_1	70	80	90	100	110	130	150
l_2	18	23	26	30	35	48	48
r	3	3	3	3	4	5	6

50022.

d_1	18/19	24/25	30/32	40/42	50/52	63	80
d_2	28	38	45	54	65	81	100
d_3	34	44	53	63	79	92	111
d_4	31	41	50	60	76	89	108
d_5	29	39	48	58	74	87	106
l_3	43	48	53	53	53	63	73
l_1	70	80	90	100	110	130	150
l_2	27	32	37	47	57	67	77
r	3	3	3	3	4	5	6

订单方式 Ordering Code (example):

Guide bush =50020.	Guide bush =50021.	Guide bush =50022.
d_1=18 mm = 018.	d_1=18 mm = 018.	d_1=18 mm = 018.
l_1 = 50 mm = 050	l_1 = 70 mm = 070	l_1 = 70 mm = 070
Order No =50020.018.050	Order No =50021.018.070	Order No =50022.018.070

NYC

50023
50024
50025

钢基铜合金中法兰模架导套
Steel with Bronze Coated Internal Bore

50023

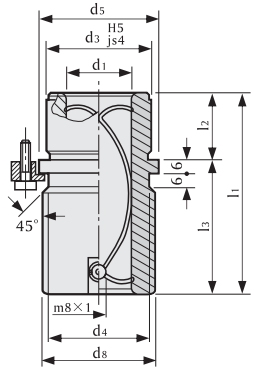

50024

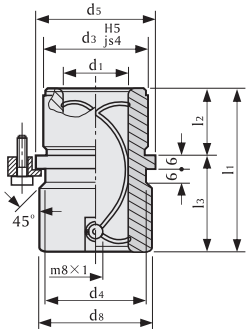

50025

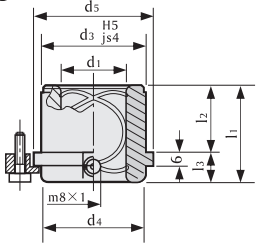

d_3	32	40	48	58	70	85	105
d_4	32	40	48	58	70	85	105
d_5	40	48	56	66	80	95	118
d_8	39	46	53	63	77	92	115

50023.

d_1	19 / 20	24 / 25	30/32	38/40	48/50	60/63	80
tol.	+0.012 +0.003	+0.012 +0.003	+0.015 +0.004	+0.015 +0.004	+0.015 +0.004	+0.018 +0.005	+0.018 +0.005
l_1	59	79	93	108	127	150	150
l_2	23	23	30	37	47	60	60
l_3	36	56	63	71	80	90	90

50024.

d_1	19 / 20	24 / 25	30/32	38/40	48/50	60/63	80
tol.	+0.012 +0.003	+0.012 +0.003	+0.015 +0.004	+0.015 +0.004	+0.015 +0.004	+0.018 +0.005	+0.018 +0.005
l_1	43	59	75	82	97	116	120
l_2	23	23	30	37	47	60	60
l_3	20	36	45	45	50	56	60

50025.

d_1	19 / 20	24 / 25	30/32	38/40	48/50	60/63	80
tol.	+0.012 +0.003	+0.012 +0.003	+0.015 +0.004	+0.015 +0.004	+0.015 +0.004	+0.018 +0.005	+0.018 +0.005
l_1	35	35	42	52	65	80	80
l_2	23	23	30	37	47	60	60
l_3	12	12	12	15	18	20	20



安装示意
Mounting Examples

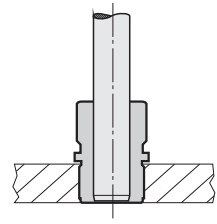

注意 Note:

Headed Guide Bushes are to be held in H5-retainer bores. Three screw clamps are provided for fixing; sizes d1=38mm and over have four.

Guide pairing:
We recommend the use of guide pillars from pairing class. These guide bushes are supplied complete with clamps and low-head socket cap screws similar DIN 6912, Head ϕ 13

材质 Material

钢+铜合金
Steel+Bronze

Execution:

Bronze coated internal bore.
Diameter D_3 and collar face precision ground.

订单方式
Ordering Code (example):

Guide bushes=50023/50024/50025.	
d_1=32 mm	= 032
Order No	=50023/50024/50025.032

NYC

50026
50026-1

钢基铜合金导套
Oilless Bushes Bronze with Non-Liquid Lubricant Steel base

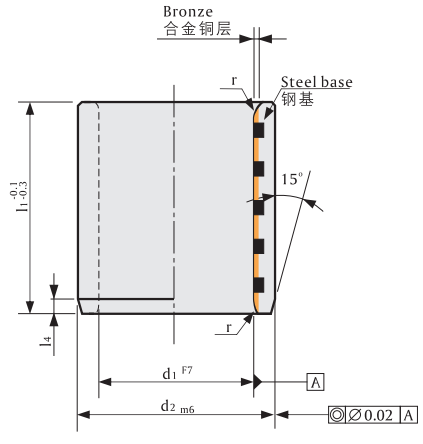

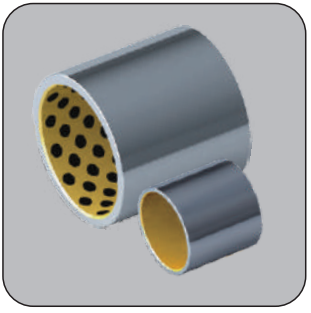

材质 Material

50026
钢基+铜合金+固体润滑材料
Steel base,
Bronze with Non-Liquid Lubricant.
Oilless lubricating.

50026-1
钢基+铜合金
Steel base and Bronze

注意 Note:

可按客户要求定制



运动方向
Direction of Motion
Embedded non-liquid lubricant
(section)

50026. / 50026-1.

d_1	8	10	13	16	20	25	30	100	120	150	200	250	300	350	400	500
d_2	15	16	20	24	28	34	40	120	140	170	220	270	320	370	420	520
r	2	2	2	2	2	2	2	2	2	2	2	2	2	2	2	2
l_4	4	4	4	4	4	4	4	4	4	4	4	4	4	4	4	4
l_1																
15	●	●	●	●	●											
20	●	●	●	●	●	●										
25	●	●	●	●	●	●	●									
30		●	●	●	●	●	●									
35				●	●	●	●									
40						●	●									
50							●	●								
80								●								
100								●	●							
120								●	●	●						
150									●	●	●	●				
180									●	●	●	●	●			
200										●	●	●	●	●		
250											●	●	●	●	●	●
300												●	●	●	●	●
400													●	●	●	●
500															●	●

订单方式 Ordering Code (example):

Guide bushes =50026.	Guide bushes =50026-1.
d_1=100 mm = 100.	d_1=100 mm = 100.
d_2=120 mm = 120.	d_2=120 mm = 120.
l_1 =50 mm = 050	l_1 =50 mm = 050
Order No =50026.100.120.050	Order No =50026-1.100.120.050

NYC

50027

压板固定式导套,VDI3356/奥迪/西亚特标准
VDI 3356 / AUDI VW 5.26.28 / SEAT 23-P-06
Oilless Guide Bushes with collar
Bronze with Non-Liquid Lubricant

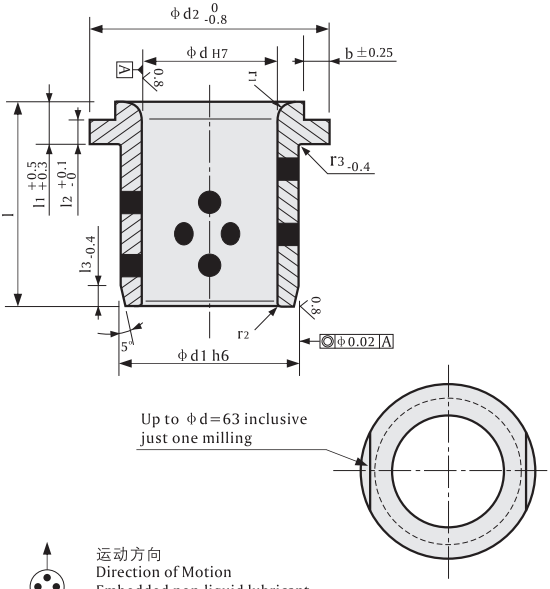

运动方向
Direction of Motion
Embedded non-liquid lubricant
(section)

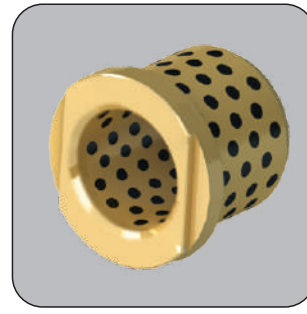

材质 Material

高力黄铜
Bronze with Non-Liquid Lubricant.
Oilless lubricating.

50027.

d	25	32	40	50	63	80	100	125	140	160
l	32	50	63	72	80	100	125	160	180	200
d_1	32	40	50	63	80	100	125	160	180	200
d_2	40	50	63	75	95	120	150	190	210	240
l_1	10	10	13	14	17	20	25	30	30	30
l_2	5	5	8	8	10	10	16	16	16	16
l_3	4	6	6	8	8	8	8	10	10	12
b	3.5	4	5	6	8	10	13	13	13	13
r_1	4	5	6	6	8	8	10	13	16	18
r_2	1	1	1	1.6	2	2.5	3.2	4	5	6
r_3	1	1	1	1.6	2	2.5	3.2	4	6	6

订单方式 Ordering Code (example):

Guide bush	=50027.
d = 25 mm	= 025.
l = 32 mm	= 032
Order No	=50027.025.032

NYC

50028

边法兰导套
Oilless Guide Bushes with collar
Bronze with Non-Liquid Lubricant

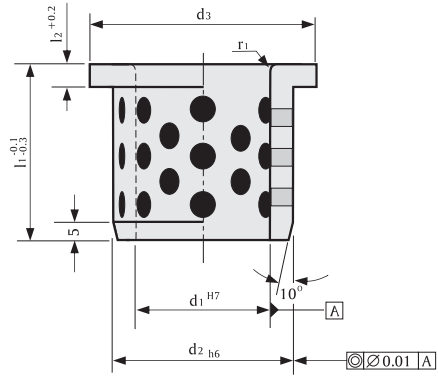

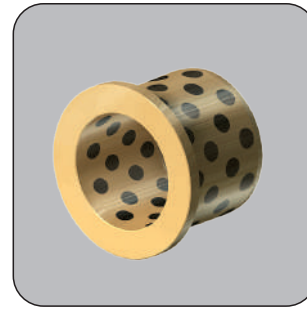

材质 Material

高力黄铜
Bronze with Non-Liquid Lubricant.
Oilless lubricating.

注意 Note:

Fit for receiving bore : H 7

Notice:

Bushes can be used with radial or axial motion.

50028

d_1	20	32	40	42	50	52	63	80	100
l_1	35	55	70	70	75	75	80	100	125
d_2	28	40	50	50	63	63	80	100	125
d_3	36	50	60	60	75	75	90	110	135
l_2	8	8	8	8	12	12	12	12	12
l_3	2	6	6	6	8	8	8	8	8

订单方式 Ordering Code (example):

Guide bushes	=50028.
d_1=020 mm	= 020.
l_1 =035 mm	= 035
Order No	=50028.020.035

NYC

50030

中法兰钢导套（注塑模），哈斯高标准
Injection Mold Bushes, Steel

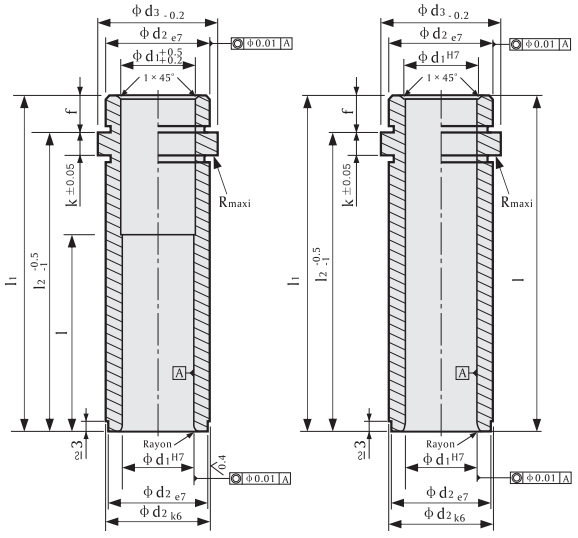



材质 Material

钢
Steel
Hardness: 62 ± 2 HRC

50030.

d_1	9/10	14/15	18/20	22/24	30/32	40/42
d_2	14	20	26	30	42	54
d_3	16	25	31	35	47	60
f	3	9	9	9	9	12
k	3	6	6	6	6	10
l_2	l / l_1					
12	15					
17	20	26	26	26		
22	25	31	31	31		
27	30	36	36	36	36	
36	39	45	45	45	45	
46	46/49	55	55	55	55	58
56	46/59	56/65	65	65	65	68
66	46/69	56/75	75	75	75	78
76		56/85	76/85	85	85	88
86		56/95	76/95	95	95	98
96		56/105	76/105	105	105	108
116		56/125	76/125	96/125	125	128
136			76/145	96/145	116/145	136/148
156				96/165	116/165	136/168
196					116/205	136/208
246						136/258

订单方式 Ordering Code (example):

Guide bushes	=	50030.
d_1=12 mm	=	012.
l_2=20 mm	=	020
Order No	=	50030.012.020

NYC

50031

边法兰钢导套（注塑模），哈斯高标准
Injection Mold Bushes, Steel

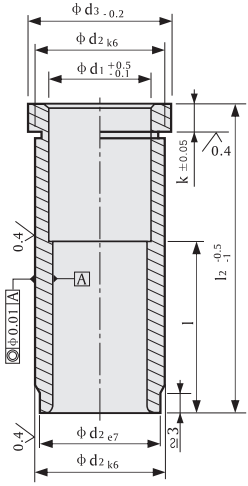

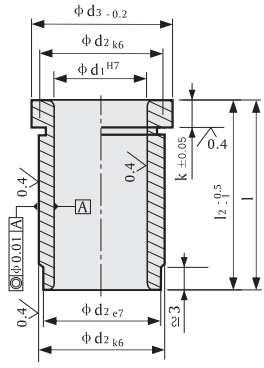

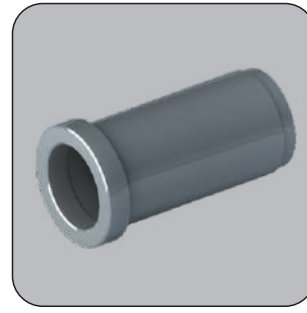

材质 Material

钢
Steel
Hardness: 62 ± 2 HRC

50031.

d_1	9/10	12	14/15	16	18/20	22/24	30/32	40/42	50	60
d_2	14	18	20	22	26	30	42	54	66	80
d_3	16	23	25	27	31	35	47	60	72	86
k	3	6	6	6	6	6	6	10	10	20
l_2	l									
9	9									
12	12		12							
17	17	17	17	17	17	17				
22	22	22	22	22	22	22				
27	27	27	27	27	27	27	27			
36	36	36	36	36	36	36	36			
46	46	46	46	46	46	46	46	46		
56	46	56	56	56	56	56	56	56		
66	46		56		66	66	66	66		
76			56		76	76	76	76	76	
86			56		76	86	86	86	86	
96			56		76	96	96	96	96	96
116					76	96	116	116	116	116
136						96	116	136	136	136
156							116	136	136	136
196								136	136	136
246								136		136

订单方式 Ordering Code (example):

Guide bushes	=	50031.
d_1 = 8 mm	=	008.
l = 16 mm	=	016
Order No	=	50031.008.016

NYC

50033
50034

钢基铜合金环型石墨导套
Steel, with Bronze Coated Internal Bore and Non-Liquid Lubricant

50033

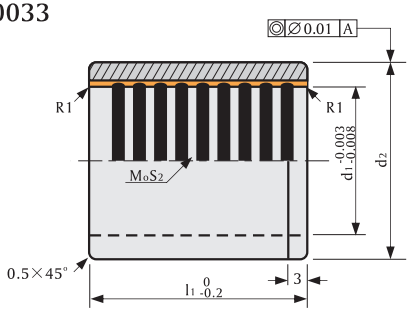

50034

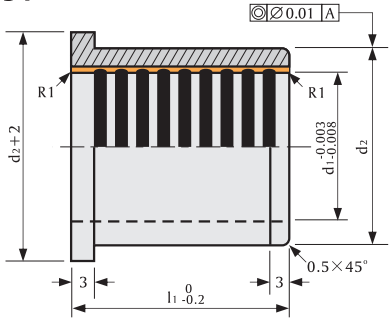

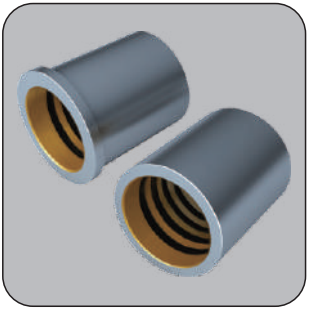

材质 Material

钢＋铜＋M_oS_2
Steel ＋Bronze ＋Non-Liquid Lubricant
Oilless lubricating.

50033 直套
50034 带法兰导套

50033. / 50034.

d_1	10	13	18	20	25	30
d_2	16 $^{0}_{-0.005}$	20 $^{0}_{-0.006}$	24 $^{0}_{-0.006}$	28 $^{0}_{-0.006}$	34 $^{0}_{-0.007}$	40 $^{0}_{-0.007}$
l_1						
10	●					
13	●	●				
16	●	●	●			
20	●	●	●	●	●	●
22	●	●	●	●	●	●
25	●	●	●	●	●	●
30			●	●	●	●
35			●	●	●	●
40						●

订单方式 Ordering Code (example):

Guide bushes =50033.	Guide bushes =50034.
d_1=10 mm = 010.	d_1=10 mm = 010.
d_2=16mm = 016.	d_2=16mm = 016.
l_1 =10 mm = 010	l_1 =10 mm = 010
Order No =50033.010.016.010	Order No =50034.010.016.010

NYC

50271

环型润滑导套
Bronze with Non-Liquid Lubricant Rings

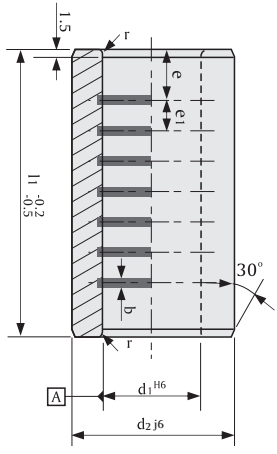

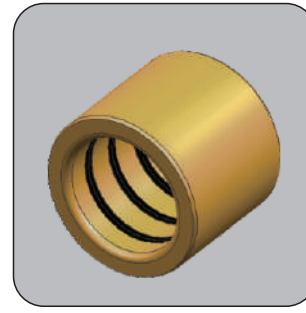

材质 Material

高力黄铜
Bronze with Non-Liquid Lubricant Rings.

50271

d_1 H6	15 / 16				19 / 20				24 / 25				30 / 32				38 / 40				48 / 50				60 / 63				80			
	+0.011 +0.002				+0.013 +0.003				+0.013 +0.003				+0.016 +0.004				+0.016 +0.004				+0.016 +0.004				+0.019 +0.005				+0.019 +0.005			
d_2 j6	28				32				40				48				58				70				85				105			
	+0.009 -0.004		+0.011 -0.005		+0.011 -0.005				+0.011 -0.005				+0.011 -0.005				+0.012 -0.007				+0.012 -0.007				+0.013 -0.009				+0.013 -0.009			
r	2				2				2.5				2.5				3				3				3.5				4			
l_1	b	n	e	e_1	b	n	e	e_1	b	n	e	e_1	b	n	e	e_1	b	n	e	e_1	b	n	e	e_1	b	n	e	e_1	b	n	e	e_1
23	2.5	2	6	11.5	2.5	2	6	11.5	2.5	2	6	11.5																				
30	2.5	2	9.5	11.5	2.5	2	9.5	11.5	2.5	2	9.5	11.5	3	2	8.5	12.5	3.5	2	8.5	13												
37	2.5	3	7	11.5	2.5	3	7	11.5	2.5	3	7	11.5	3	3	6	12.5	3.5	2	12	13	4.5	2	10.5	16								
47	2.5	4	6.5	11.5	2.5	4	6.5	11.5	2.5	4	6.5	11.5	3	3	11	12.5	3.5	3	10.5	13	4.5	2	15.5	16								
60	2.5	5	7	11.5	2.5	5	7	11.5	2.5	5	7	11.5	3	4	11	12.5	3.5	4	10.5	13	4.5	3	14	16	4.5	3	14	16				
77					2.5	6	10	11.5	2.5	6	10	11.5	3	5	13.5	12.5	3.5	5	12.5	13	4.5	4	14.5	16	4.5	4	14.5	16				
95													3	7	10	12.5	3.5	6	15	13	4.5	5	15.5	16	4.5	5	15.5	16				
120																	3.5	8	14.5	13	4.5	6	20	16	4.5	6	20	16	4.5	6	20	16
135																													4.5	7	19.5	16

订单方式 Ordering Code (example):

Guide bushes	=50271.
d_1=15 mm	= 015.
d_2=28mm	= 028.
l_1 =23 mm	= 023
Order No	=50271.015.028.023

NYC

50272

边法兰环型润滑导套
Bronze with Non-Liquid Lubricant Rings

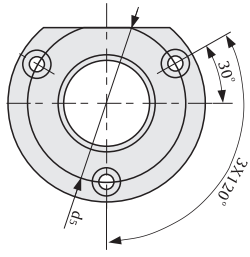

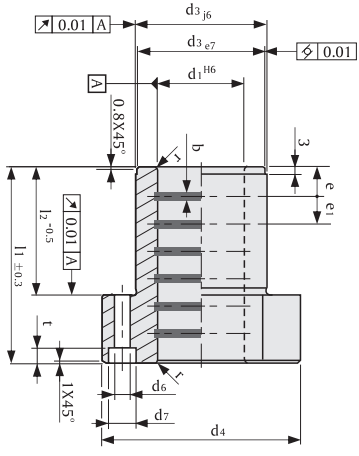

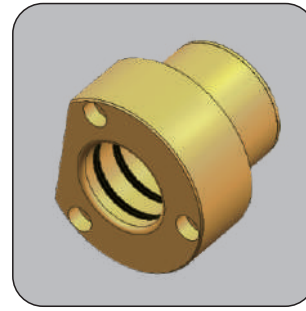

材质 Material

高力黄铜
Bronze with Non-Liquid Lubricant Rings.

适配 Fixing:

Use countersunk head screw
DIN 7991/ISO 10642

d= ⌀19/20	M4 × 20
d= ⌀24/25/30/32	M5 × 30
d= ⌀38/40	M6 × 35
d= ⌀48/50/60/63	M8 × 50
d= ⌀80	M10 ×55

50272

d_1 H6	19 / 20	24 / 25	30 / 32	38 / 40	48 / 50	60 / 63	80
	+0.013 +0.003	+0.013 +0.003	+0.016 +0.004	+0.016 +0.004	+0.016 +0.004	+0.019 +0.005	+0.019 +0.005
d_3 e7	32	40	48	58	70	85	105
	-0.050 -0.075	-0.050 -0.075	-0.050 -0.075	-0.060 -0.090	-0.060 -0.090	-0.072 -0.107	-0.072 -0.107
d_3 j6	32	40	48	58	70	85	105
	+0.011 -0.005	+0.011 -0.005	+0.011 -0.005	+0.012 -0.007	+0.012 -0.007	+0.013 -0.009	+0.013 -0.009
d_4	50	63	72	85	104	120	148
d_5	40	50	58	70	86	100	125
d_6	45	5.5	5.5	6.6	9	9	11
d_7	8	10	10	11	15	15	18
t	4.6	5.7	5.7	6.8	9	9	11
k	18	23	28	33	38	46	56
D	2	2.5	2.5	3	2.5	3.5	4
b	2.5	2.5	3	3.5	4.5	1.5	4.5
n	4	5	5	5	6	6	7
e	8	8	11	11	11	11	14.5
e_1	12	11.5	12.5	13.75	16	16	16
l_1	52	62	72	77	102	102	125
l_2	37	37	47	47	60	60	75

订单方式 Ordering Code (example):

Guide bushes	=	50272
d_1=19 mm	=	019.
d_3=32mm	=	032.
l_1 =52mm	=	052
Order No	=	50272.019.032.052

NYC

50703

中法兰环型润滑导套
Bronze with Non-Liquid Lubricant Rings

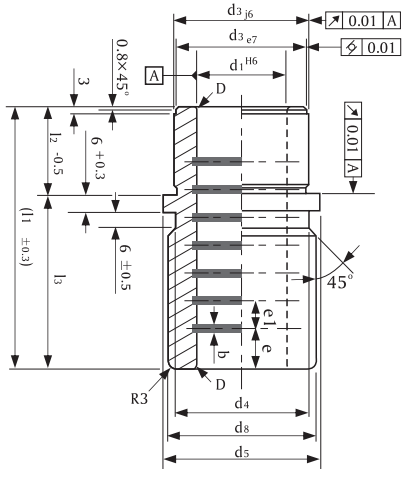

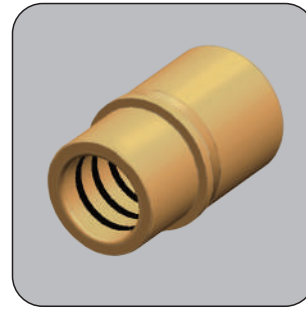

材质 Material

高力黄铜
Bronze with Non-Liquid Lubricant Rings.

50703

d_1 H6	19 / 20	24 / 25	30 / 32	38 / 40	48 / 50	60 / 63	80
	+0.013 +0.002	+0.013 +0.002	+0.016 +0.003	+0.016 +0.003	+0.016 +0.003	+0.019 +0.004	+0.019 +0.004
d_3 e7	32	40	48	58	70	85	105
	-0.050 -0.075	-0.050 -0.075	-0.050 -0.075	-0.060 -0.090	-0.060 -0.090	-0.072 -0.107	-0.072 -0.107
d_3 j6	32	40	48	58	70	85	105
	+0.011 -0.005	+0.011 -0.005	+0.011 -0.005	+0.012 -0.007	+0.012 -0.007	+0.013 -0.009	+0.013 -0.009
d_4	32	40	48	58	70	85	105
d_5	40	48	56	66	80	95	118
d_8	39	46	53	63	77	92	115
l_1	59	79	93	108	127	150	150
l_2	23	23	30	37	47	60	60
l_3	36	56	63	71	80	90	90
D	2	2.5	2.5	3	3	3.5	4
b	2.5	2.5	3	3.5	4.5	4.5	4.5
n	5	7	7	7	7	8	8
e	6.5	5	9	14.1	16.1	19.7	19.7
e_1	11.5	11.5	12.5	13.3	15.8	15.8	15.8

订单方式 Ordering Code (example):

Guide bushes	=50703.
d_1=19 mm	= 019.
d_3=32mm	= 032.
l_1 =59mm	= 059
Order No	=50703.019.032.059

NYC

50210

压板
Clamp for Guide Bushes

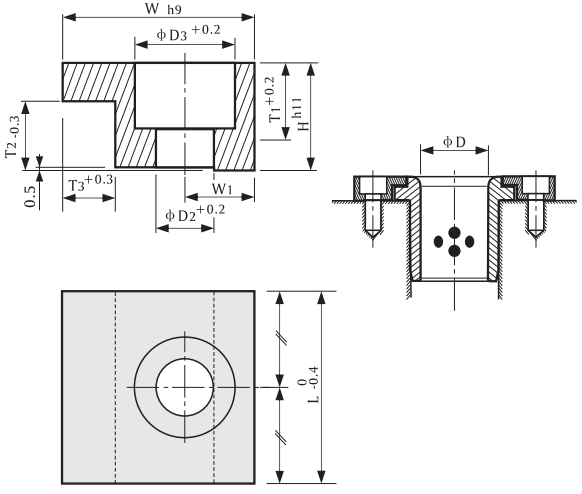

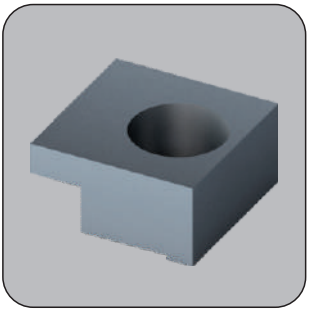

材质 Material

钢
Steel

Notice:

Break all sharp edges

50210.

TYPE	01	02	03	04
D	φ25 a/to φ50	φ63 a/to φ160	φ25 a/to φ50	φ63 a/to φ125
L	20	32	20	25
W	20	32	25	32
H	10	16	12	16
T_1	7	11.5	8.5	11.5
T_2	6.3	10	6.3	6.3
T_3	5	10	5	10
W_1	7.5	11	10	11
D_2	7	11.5	9	11
D_3	11	17.5	15	18

订单方式 Ordering Code (example):

Clamp	=50210.
Type	= 01.
Order No	=50210.01

NYC

50211

压板
Clamp for Guide Bushes

Shape A

Shape B

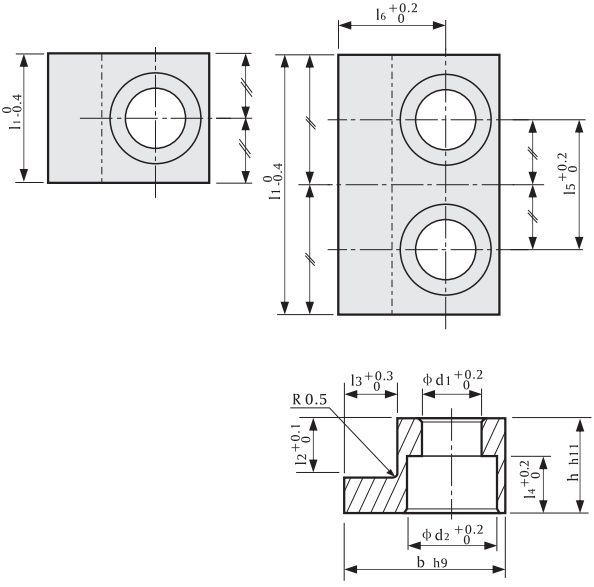

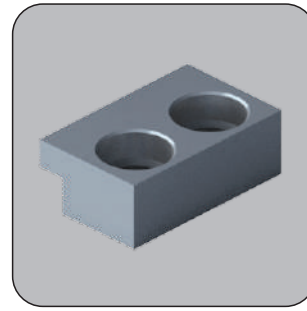

材质 Material

钢
Steel

Notice:

Break all sharp edges

50211.

φ d Bushes	25 a/to 32	40	50	63 a/to 80	100 a/to 160
b	20	20	25	28	40
h	10	12	14	16	25
l_1	20	40	40	50	60
l_2	5	8	8	10	16
l_3	5	5	6	8	14
l_4	7	7	9	11.5	13.5
l_5	-	20	20	25	30
l_6	12.65	12.65	15.65	18.15	27.15
d_1	7	7	9.5	11.5	14
d_2	11	11	14.5	17.5	20
Shape	A	B	B	B	B

订单方式 Ordering Code (example):

Clamp	=	50211.
h	=	10
Order No	=	50211.10

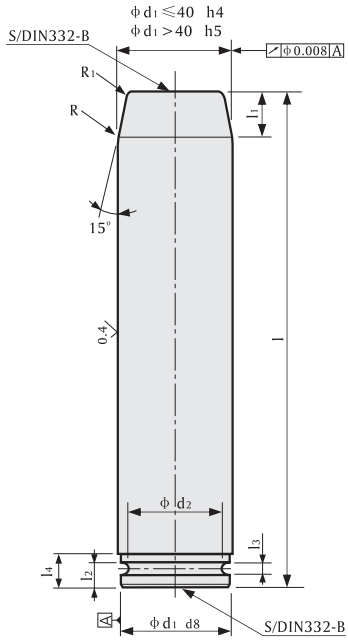

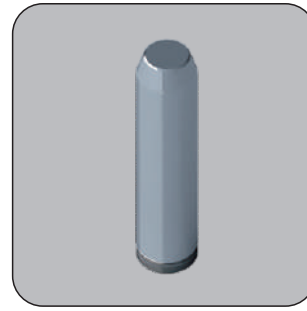

材质 Material

钢，表面热处理
Steel, surface hardened
Surface hardness: 62±2 HRC
Hardness penetration depth: 1.5+1 mm

50037.

Φ d1	20	25	32	40	50	63
Φ d2	17.3	22.3	27.8	35.8	45.8	56.8
l1	6	8	10	12	16	16
l2	6	6	10	10	10	16
l3	2.7	2.7	4.2	4.2	4.2	6.2
l4	8	8	12	12	12	18
R	10	12.5	16	20	25	31.5
R1	2	2	2	3	3	5
l						
100	●					
125		●				
160		●	●			
180				●		
200			●	●		
220			●	●	●	
280				●	●	●

订单方式 Ordering Code (example):

Guide Pillars	=50037.
d1=20 mm	= 020.
l=100 mm	= 100
Order No	=50037.020.100

NYC

50038

导柱，福特WDX1360/纳姆斯G51/欧宝U 28.01
Guide Pillars, FORD WDX 1360 / NAAMS G51 / OPEL U 28.01

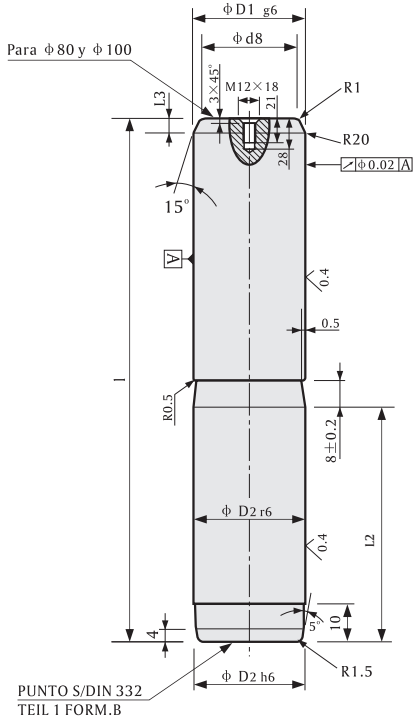



材质 Material

钢，表面热处理
Steel, surface hardened
Surface hardness: 62±2 HRC
Hardness penetration depth: 1.5+1 mm

50038.									
D1	25	32	40	50	63	80	100	115	125
D2	25	32	40	50	63	80	100	115	125
L2	40	45	56	70	80	100	125	140	140
L3	8	8	8	10	10	10	10	10	10
R1	2	2	2	2.5	2.5	3	3	3	3
l2	40	45	56	70	80	100	125	140	140
l									
80	●								
100	●	●							
125	●	●							
140	●	●							
160	●	●	●	●					
180	●	●	●	●					
200		●	●	●	●				
225			●	●	●				
250			●	●	●	●			
280				●	●	●			
315				●	●	●	●		
355					●	●	●		
400					●	●	●	●	●
450									●
500					●	●	●	●	●
550									●
600									●
650									●
700									●

订单方式 Ordering Code(example):
Guide Pillars= 50038.
d1=25mm = 025.
l=80mm = 080.
Order No =50038.025.080

NYC

50039

导柱
Guide Pillars

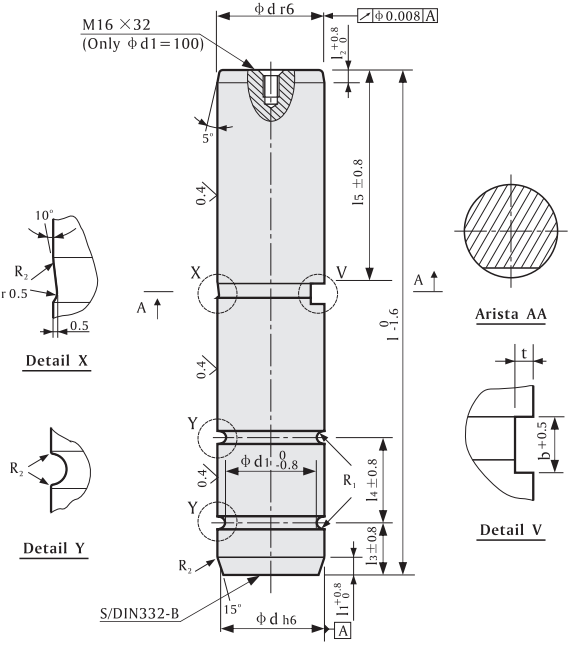

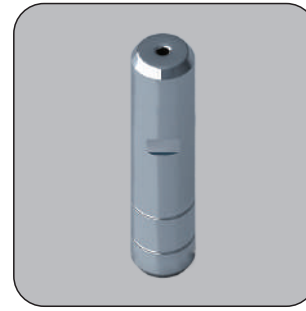

材质 Material

钢，表面热处理
Steel, surface hardened
Surface hardness: 62±2 HRC
Hardness penetration depth: 1.5+1 mm

50039.

ϕd	16	20	25	32	40	50	50	63	80	100	125	140	160
ϕd1	14	16	21	27	35	45	45	57	74	94	119	134	154
l1	2	4	4	6	6	8	8	8	8	8	10	10	10
l2	3	3	3	4	4	4	4	4	4	4	5	5	5
l3	8	10	13	16	16	20	20	32	32	32	36	36	36
l4	13	16	20	30	30	40	40	40	50	50	50	50	50
l5	36	40	45	45	56	56	70	60	100	125	140	160	180
R1	1	2	2	2.5	2.5	2.5	2.5	3	3	3	3	3	3
R2	0.3	0.6	0.6	0.8	0.8	0.8	0.8	1	1	1	1	1	1
b	-	-	5.5	5.5	8.5	8.5	8.5	10.5	10.5	-	-	-	-
t	-	-	3	3	4	5	5	6.5	8	-	-	-	-

l													
125	●	●	●										
140		●	●	●	●	●							
160			●	●	●	●		●					
180			●	●	●		●	●					
200				●	●		●	●					
224			●	●	●		●	●	●				
250							●	●	●				
280							●	●					
315							●	●	●	●			
355								●	●	●	●		
400										●	●	●	
450											●	●	●
500												●	●
560													●

订单方式 Ordering Code (example):

Guide Pillars	=50039.
d =16 mm	= 016.
l =125 mm	= 125
Order No	=50039.016.125

NYC

50040

导柱, 标致雪铁龙标准
PSA.EW.52.110.G
Guide Pillars, PSA with Retaining ring Groove

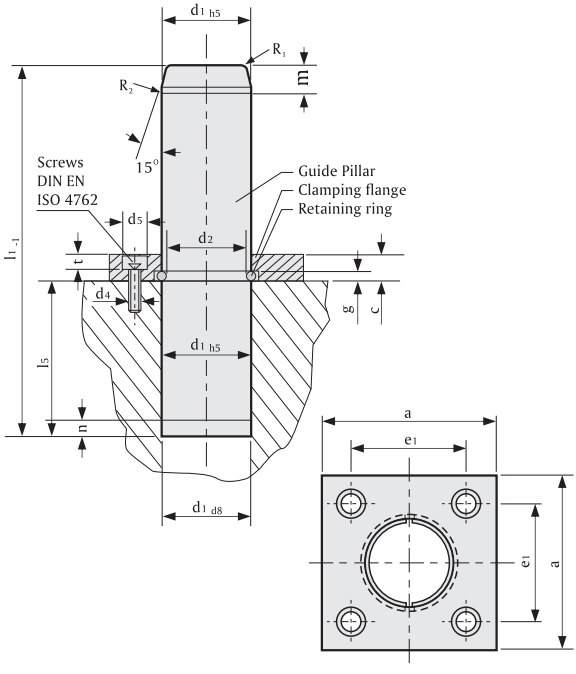

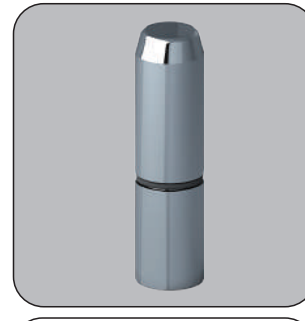

材质 Material

钢，表面热处理
Steel, surface hardened
Surface hardness: 60+4 HRC
Hardness penetration depth: 1.5+1 mm

Execution:

Diameter precision ground

注意 Note:

Matching guide bushes
50013 AFNOR
Fit for receiving bore: M6

Guide pillar is recommended to be used only with Guide Elements with Non-Liquid Lubricant.

适配 Fixing:

Clamping flange with retaining ring screws not included
Retaining ring

50040.

d_1	25	32	40	50	63	80	100
d_2	22.3	27.8	35.8	45.8	56.8	73.8	93.8
d_4	M6	M6	M6	M8	M10	M12	M12
d_5	11	11	11	15	18	20	20
a	45	56	70	80	100	110	140
c	10	10	12	14	18	20	20
g	2.7	4.2	4.2	4.2	6.2	6.2	6.2
e_1	31	36	50	55	70	80	100
t	7	7	7	9	11	13	13
l_5	25	32	63	80	100	125	160
l_1							
100	●						
125	●	●					
140	●	●					
160	●	●					
180	●	●	●				
200	●	●	●	●			
220	●	●	●	●			
250		●	●	●	●		
280			●	●	●		
315			●	●	●	●	
355				●	●	●	●
400				●	●	●	●
450					●	●	●
500					●	●	●

订单方式
Ordering Code (example):

Guide Pillars	=50040.
d_1=40 mm	= 040.
l_1=250 mm	= 250
Order No	= 50040.040.250

NYC

50041
50042

导柱，VDI3356标准
Guide Pillars with Pilot Taper for Large Tools VDI 3356 with Pilot Taper and Snap Ring Groove DC

50041

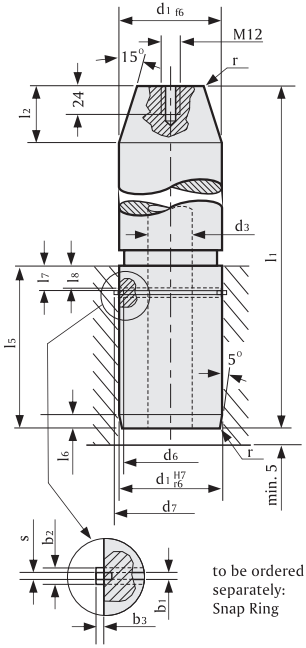

50042

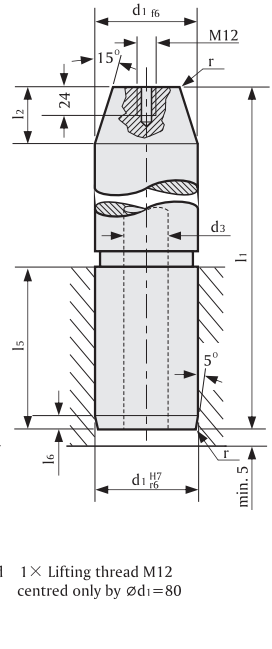

to be ordered separately: Snap Ring

1× Lifting thread M12 centred only by Ød1=80



* 2× Lifting thread M8 fromø d1=100

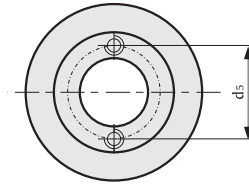

50041 / 50042

d1	80	100	125	160
d3	-	50	65	95
d5	-	62	82	119
d6	73.5	92.5	117.5	151.5
d7	83.2	103.8	128.8	164.3
r	3	3	4	4
l2	50	50	50	50
l5	100	125	140	180
l6	4	4	5	5
l7	21	31	31	31
l8	20	30	30	30
b1	2.1	2.6	2.6	2.6
b2	4.2	5.2	5.2	5.2
b3	2.8	3.4	3.4	4
s	2.0	2.5	2.5	2.5
l1				
280	●			
315	●	●		
355	●	●	●	
400	●	●	●	
450	●	●	●	●
500			●	●
560				●

订单方式 Ordering Code (example):

Guide Pillars =50041.	Guide Pillars =50042.
d1=80 mm = 080.	d1=80 mm = 080.
l1 = 315mm = 315	l1 = 315mm = 315
Order No =50041.080.315	Order No =50042.080.315

材质 Material

钢，表面热处理

Steel, surface hardened

Surface hardness: 60+4 HRC

Hardness penetration depth: 1.5+1 mm

Execution:

precision ground

ø 80	Without central hole with 1 lifting thread M12 centred
from ø100	with central hole (through) and with 2 lifting threads M8

注意 Note:

Fit for receiving bore : H 7

The guide pillar is only recommended for use with solid lubricants.

Matching guide bushes:
50010, 50011, 50012

NYC

50043

导柱，大众标准
Guide Pillars with Groove for Large Tools to VW



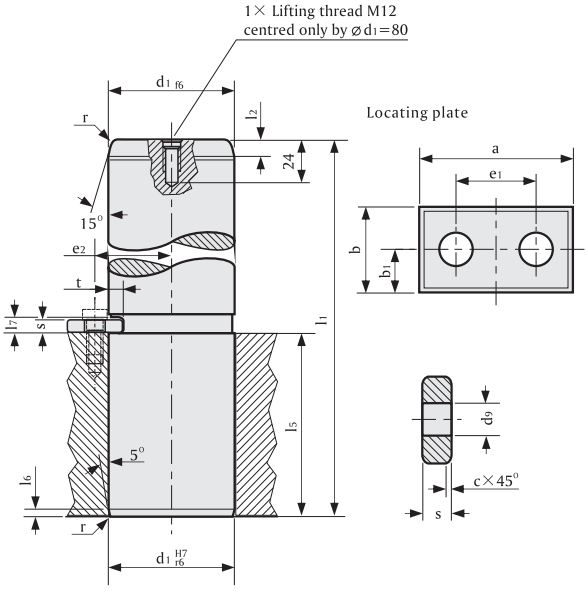

材质 Material

钢，表面热处理
Steel, surface hardened
Surface hardness: 60+4 HRC
Hardness penetration depth: 1.5+1 mm

Execution:

precision ground
with thread
M12

注意 Note:

Fit for receiving bore: H7
The guide pillar is only recommended fo use with solid lubricants.

Matching guide bushes:
50010, 50011, 50012

50043.

d_1	25	32	40	50	63	80
l_2	8	8	8	10	10	10
l_5	40	45	56	70	80	100
l_6	4	4	4	4	4	4
l_7	7	7	10	10	12	12
r	2	2	2	2.5	2.5	3
a	40	40	48	48	60	60
s	5	5	8	8	10	10
c	1	1	2	2	2	2
b	20	20	25	25	34	34
e_1	20	20	24	24	30	30
t	3	3	4	5	6.5	8
e_2	20.5	24	29.5	33.5	43	50
d_9	9	9	11	11	14	14
l_1						
125	●	●				
140	●	●	●			
160	●	●	●	●		
180	●	●	●	●	●	
200	●	●	●	●	●	
224	●	●	●	●	●	●
250		●	●	●	●	●
280			●	●	●	●
315				●	●	●
355				●	●	●
400					●	●
450						●
500						●

订单方式
Ordering Code (example):

Guide Pillars	=50043.
d_1=80 mm	= 080.
l_1 = 315 mm	= 315
Order No	=50043.080.315

NYC

50044
50045

导柱, 奥迪39D862标准,
AUDI 39D862, Guide Pillars for Large Tools
DIN 9833/ISO 9182-3 Guide Pillars
with Snap Ring Groove DC

50044

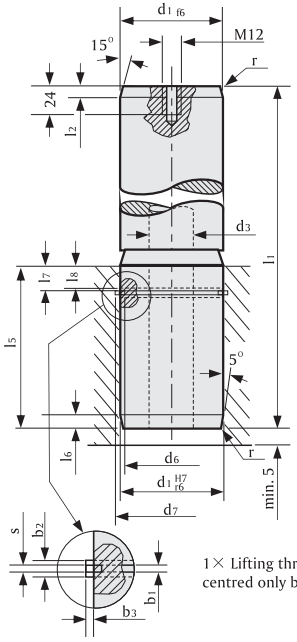

1× Lifting thread M12
centred only by ⌀d1=80

50045

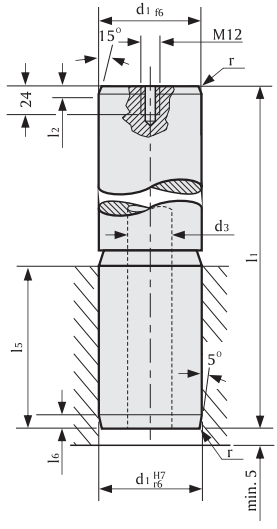

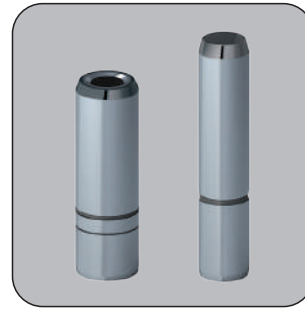

* 2× Lifting thread M8 from⌀ d1=100

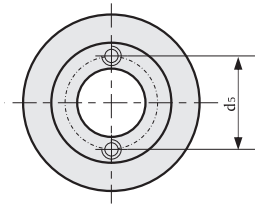

Execution: precision ground

Up to⌀d1= 80 Without central hole
by ⌀d1= 80 with 1 lifting thread M12 centred

From⌀d1= 100 with central hole (through) and with 2 lifting threads M12 upon request

50044.
50045.

d1	25	32	40	50	63	80	100	125	160
d3	-	-	-	-	-	-	50	65	95
d5	-	-	-	-	-	-	72	90	132
d6	-	-	34.8	44.8	57.5	73.5	92.5	117.5	151.5
d7	-	-	43	53	66	83.2	103.8	128.8	164.3
r	2	2	2	2.5	2.5	3	3	4	4
l2	8	8	8	10	10	10	10	12	12
l5	40	45	56	70	80	100	125	140	180
l6	4	4	4	4	4	4	4	5	5
l7	-	-	15	15	15	21	31	31	31
l8	-	-	14	14	14	20	30	30	30
b1	-	-	1.7	1.7	1.7	2.1	2.6	2.6	2.6
b2	-	-	3.2	3.2	3.2	4.2	5.2	5.2	5.2
b3	-	-	2.3	2.3	2.3	2.8	3.4	3.4	4
s	-	-	1.5	1.5	1.5	20	2.5	2.5	2.5
l1									
125	●	●							
140	●	●	●						
160	●	●	●	●					
180	●	●	●	●	●				
200	●	●	●	●	●				
224	●	●	●	●	●	●			
250		●	●	●	●	●	●		
280			●	●	●	●	●		
315				●	●	●	●	●	
355				●	●	●	●	●	
400					●	●	●	●	●
450						●	●	●	●
500						●	●	●	●
560									●

材质 Material

钢，表面热处理

Steel, surface hardened
Surface hardness: 60+4 HRC
Hardness penetration depth: 1.5+1 mm

Execution:

Fit for receiving bore: H7
The guide pillar is only recommended for use with solid lubricants.
Matching guide bushes:
50010, 50011, 50012

订单方式
Ordering Code (example):

Guide Pillars	=50044.
d1=40 mm	= 040.
l1 = 200mm	= 200
Order No	=50044.040.200

Guide Pillars	=50045.
d1=100 mm	= 100.
l1 = 355mm	= 355
Order No	=50045.100.355

NYC

50046

导柱 (带法兰), 福特WDX1360
FORD WDX 1360
Guide Pillars with Collar to WDX

without Screw Clamps

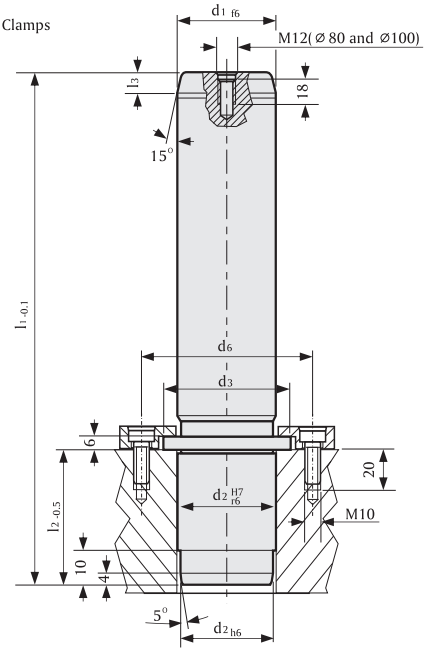

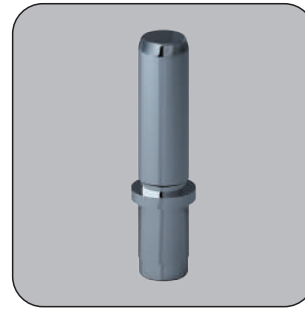

材质 Material

(钢，表面热处理)
Steel, surface hardened
Surface hardness: 60+4 HRC
Hardness penetration depth: 1.5+1 mm

Execution: Precision ground

Remark: method of manufacture entails that centre holes are not concentric with O.D.

Guide pillar is recommended to be used only with Guide Elements with Non-Liquid Lubricant.

Fit for receiving bore: H7

适配 Fixing:
(to be ordered separately)

Screw Clamps with Screws
M10×20 DIN EN ISO 4762
bis ⌀50 2 screw clamps
ab ⌀63 3 screw clamps

50046.

d_1	25	32	40	50	63	80	100
d_2	25	32	40	50	63	80	100
d_3	32	40	50	63	80	100	125
d_6	68	75	83	93	106	123	143
l_2	40	45	56	70	80	100	125
l_3	6	8	8	10	10	10	10
l_1							
125	●						
140	●	●					
160	●	●	●	●			
180	●	●	●	●			
200	●	●	●	●	●		
224	●	●	●	●	●	●	
250		●	●	●	●	●	
280			●	●	●	●	●
315				●	●	●	●
355					●	●	●
400					●	●	●
500						●	●

订单方式
Ordering Code (example):

Guide Pillars	=50046.
d_1=32 mm	= 032.
l_1 = 140 mm	= 140
Order No	=50046.032.140

NYC

50049

导柱
Guide Pillars

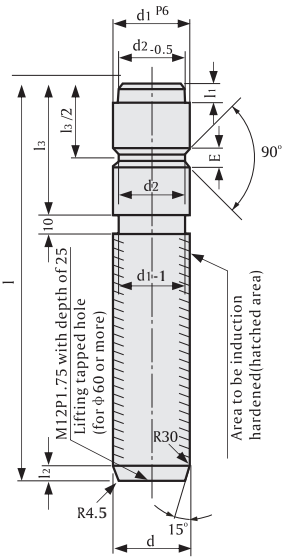

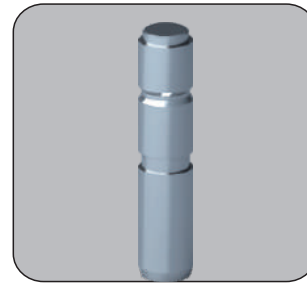

材质 Material

钢
Steel

50049

d	d1	d2	l	l3	l1	l2	E
25 -0.005 -0.015	25 +0.035 +0.022	21	80	30	5	5	8
25 -0.005 -0.015	25 +0.035 +0.022	21	100	30	5	5	8
25 -0.005 -0.015	25 +0.035 +0.022	21	120	30	5	5	8
25 -0.005 -0.015	25 +0.035 +0.022	21	140	30	5	5	8
25 -0.005 -0.015	25 +0.035 +0.022	21	160	30	5	5	8
30 -0.005 -0.015	30 +0.035 +0.022	26	100	40	5	5	8
30 -0.005 -0.015	30 +0.035 +0.022	26	120	40	5	5	8
30 -0.005 -0.015	30 +0.035 +0.022	26	140	40	5	5	8
30 -0.005 -0.015	30 +0.035 +0.022	26	160	40	5	5	8
30 -0.005 -0.015	30 +0.035 +0.022	26	180	40	5	5	8
30 -0.005 -0.015	30 +0.035 +0.022	26	200	40	5	5	8
40 -0.005 -0.015	40 +0.042 +0.026	36	120	50	5	5	8
40 -0.005 -0.015	40 +0.042 +0.026	36	140	50	5	5	8
40 -0.005 -0.015	40 +0.042 +0.026	36	160	50	5	5	8
40 -0.005 -0.015	40 +0.042 +0.026	36	180	50	5	5	8
40 -0.005 -0.015	40 +0.042 +0.026	36	200	50	5	5	8
50 -0.005 -0.015	50 +0.042 +0.026	45	160	70	10	10	10
50 -0.005 -0.015	50 +0.042 +0.026	45	180	70	10	10	10
50 -0.005 -0.015	50 +0.042 +0.026	45	200	70	10	10	10
50 -0.005 -0.015	50 +0.042 +0.026	45	250	70	10	10	10
50 -0.005 -0.015	50 +0.042 +0.026	45	300	70	10	10	10
60 -0.010 -0.020	60 +0.051 +0.032	55	200	90	10	10	12
60 -0.010 -0.020	60 +0.051 +0.032	55	220	90	10	10	12
60 -0.010 -0.020	60 +0.051 +0.032	55	250	90	10	10	12
60 -0.010 -0.020	60 +0.051 +0.032	55	300	90	10	10	12
60 -0.010 -0.020	60 +0.051 +0.032	55	350	90	10	10	12
65 -0.010 -0.020	65 +0.051 +0.032	60	250	100	10	10	12
65 -0.010 -0.020	65 +0.051 +0.032	60	300	100	10	10	12
65 -0.010 -0.020	65 +0.051 +0.032	60	350	100	10	10	12
80 -0.010 -0.025	80 +0.051 +0.032	75	250	120	10	10	12
80 -0.010 -0.025	80 +0.051 +0.032	75	300	120	10	10	12
80 -0.010 -0.025	80 +0.051 +0.032	75	350	120	10	10	12
80 -0.010 -0.025	80 +0.051 +0.032	75	400	120	10	10	12
100 -0.010 -0.025	100 +0.059 +0.037	95	300	150	10	10	12
100 -0.010 -0.025	100 +0.059 +0.037	95	350	150	10	10	12
100 -0.010 -0.025	100 +0.059 +0.037	95	400	150	10	10	12
100 -0.010 -0.025	100 +0.059 +0.037	95	450	150	10	10	12
100 -0.010 -0.025	100 +0.059 +0.037	95	500	150	10	10	12

订单方式 Ordering Code (example):

Guide Pillars = 50049.
d = 25mm = 025.
l = 80mm = 080
Order No. = 50049.025.080

NYC

50240
50241

固定块 / 固定环
Clamp for Center Retained Pillar / Ring for Retained Pillar

50240.

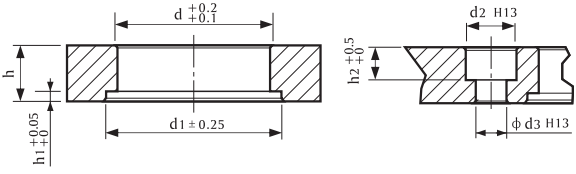

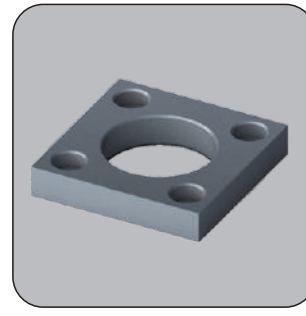

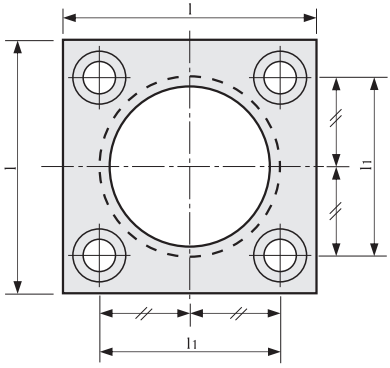

50241.

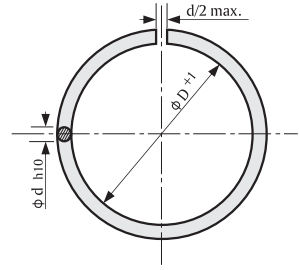

50240.

ϕ d	40	50	63	80	100
ϕ d1	45	55	70	87	107
h1	4.2	4.2	6.2	6.2	6.2
h	12	14	18	20	20
l	70	80	100	110	140
l1	50	55	70	80	100
d3	6.6	9	11	14	14
d2	12	16	18	22	22
h2	7	9	11	13	13

50241.

ϕ PILLAR	ϕ d	ϕ D
20	2.5	17.3
25	2.5	22.3
32	4	27.3
40	4	35.8
50	4	45.8
63	6	56.8
80	6	73.8

订单方式 Ordering Code (example):	订单方式 Ordering Code (example):
Clamp =50240.	Ring =50241.
d=40 mm = 040	ϕ PILLAR =20mm= 020
Order No =50240.040	Order No =50241.020

50240.

材质 Material

钢
Steel

Notice:
Corner without indications: 1 × 45°

50241

Material

钢
Steel

NYC

50243

压板
Clamp for Center Retained Pillar

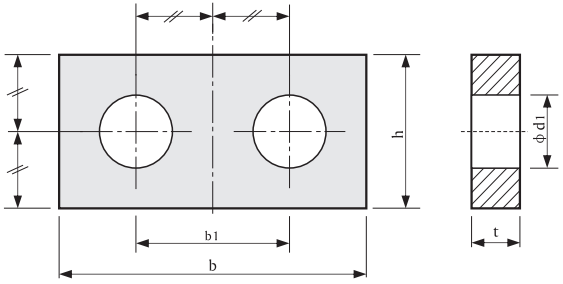

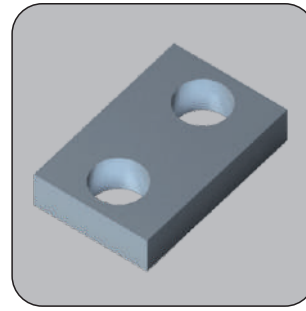

材质 Material

钢
Steel

Notice:
Break all sharp edges

50243.

Type	01	02	03	04	05	06
b	32	40	50	63	80	100
h	20	25	32	40	40	50
t	5	8	10	10	10	16
b1	16	24	30	40	50	60
d1	9	11	14	14	14	18
Para Columna	ϕ 25 a ϕ 32	ϕ 40 a ϕ 50	ϕ 63 a ϕ 80	ϕ 100	ϕ 125	ϕ 140 a ϕ 160

订单方式 Ordering Code (example):

Clamp	=50243.
Type	= 01.
Order No	=50243.01

NYC

50050

自润滑薄型滑板
Sliding Pads, Small Dimensions Bronze with Non-Liquid Lubricant

Shape A

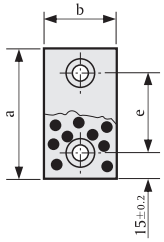

Shape B

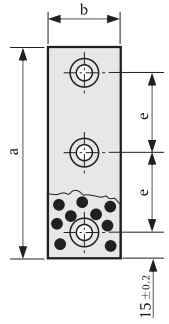

Shape C

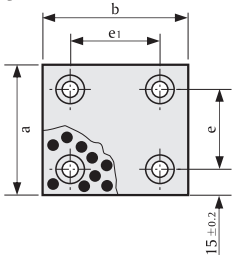

Shape D

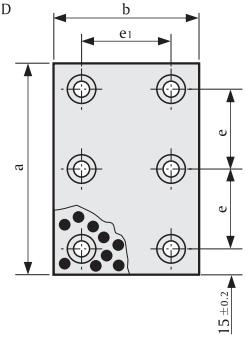



运动方向
Direction of Motion
Embedded non-liquid lubricant (section)

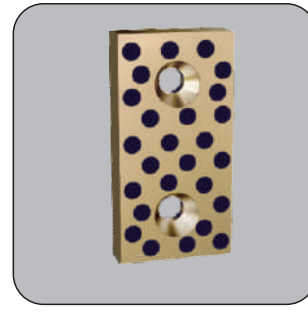

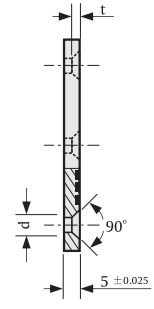

50050.

规格代码 Order No	形状 Shape	b 0 -0.2	a 0 -0.2	e ±0.1	e1 ±0.1	d	t	Number of Screw holes
50050.018.050	A	18	50	20	-	6.5	4	2
075			75	45	-			
100			100	70	-			
150	B		150	60	-			3
50050.028.050	A	28	50	20	-	9.0	5	2
075			75	45	-			
100			100	70	-			
150	B		150	60	-			3
50050.038.050	A	38	50	20	-			2
075			75	45	-			
100			100	70	-			
150	B		150	60	-			3
50050.048.075	A	48	75	45	-			2
100			100	70	-			
125			125	95	-			
150	B		150	60	-			3
50050.075.075	C	75	75	45	45			4
100			100	70				
125			125	95				
150	D		150	60				6
50050.100.100	C	100	100	70	70			4
125			125	95				
150	D		150	60				6

订单方式 Ordering Code (example):

Sliding Pad	=50050.
b=18 mm	= 018.
a=50 mm	= 050
Order No	=50050.018.050

Description:
Guide pads find preference in large press tools with considerable lateral work forces. Bronze pads with embedded non-liquid lubricant ensure maintenance free, self-lubricating service even in arduous multi-shift applications.

材质 Material
高力黄铜
Bronze with Non-Liquid Lubricant.
Oilless lubricating.

注意 Note:
Screws not included

适配 Fixing:
Use countersunk head screw
DIN 7991/ISO 10642
d= Ø6.5 M 6 × 10
d= Ø9 M 8 × 16

NYC

50051

滑板, 奥迪/福特/欧宝/VDI3357标准 AUDI 39D863 / FORD WDX13-70 / OPEL U3425 / VDI3357, Sliding Pads, Bronze with Non-Liquid Lubricant

Shape A

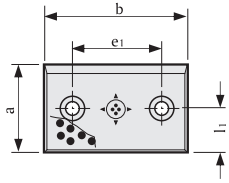

Shape B

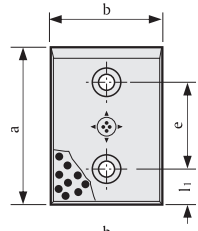

Shape C

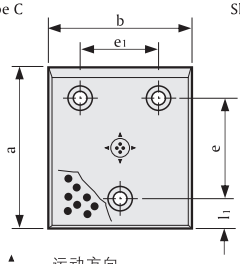

Shape D

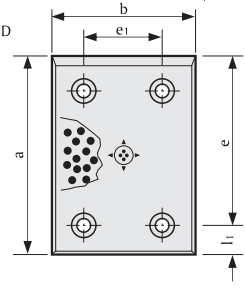



运动方向
Direction of Motion
Embedded non-liquid lubricant (section)

50051.

规格代码 Order No	39D863	形状 Shape	b $^{0}_{-0.2}$	a $^{0}_{-0.2}$	l_1 ±0.1	e ±0.1	e_1 ±0.1	d H13	d_1 H13	t $^{+0.3}_{0}$	Number of Screw holes
50051.050.080	12	B	50	80	25	30	-	9	15	9	2
100	13			100		50	-	13.5	20	13	
125	14			125		75	-				
160	15			160		110	-				
200	16			200		150	-				
50051.080.050	21	A	80	50	25	-	30	9	15	9	2
080	22	B	80	80	25	30	-	13.5	20	13	
100	23			100		50	-				
125	24			125		75	-				
160	25			160		110	-				
200	26			200		150	-				
250				250	40	170	-				
315				315	40	235	-				
50051.100.050	31	A	100	50	25	-	50	13.5	20	13	2
080	32			80	40	-	-				
100	33	B	100	100	25	50	-				
125	34			125		75	-				
160	35			160		110	-				
200	36			200		150	-				
250				250	40	170	-				
315				315	40	235	-				
50051.125.050	41	A	125	50	25	-	75	13.5	20	13	2
080	42			80	40	-					
100	43	C	125	100	25	50					3
125	44			125		75					
160	45			160		110					
200	46			200		150					
250				250	40	170					
315				315	40	235					
50051.160.050	51	A	160	50	25	-	110	13.5	20	13	2
080	52			80	40	-					
100	53	C	160	100	25	50					3
125	54			125		75					
160	55			160		110					
200	56			200		150					
250		D	160	250	40	170					4
315				315	40	235					

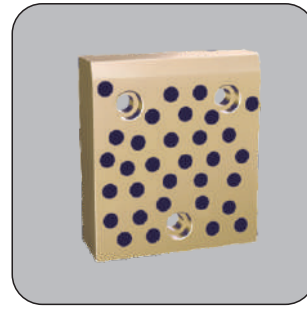

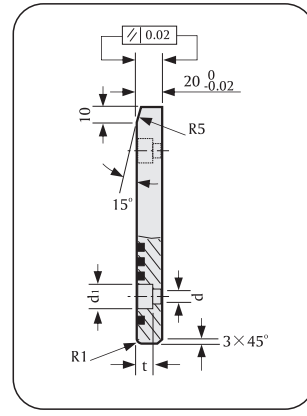

Description:

Sliding pads find preference in large press tools with considerable lateral work forces. Bronze pads with embedded non-liquid lubricant ensure maintenance free, self-lubricating service even in arduous multi-shift applications.

材质 Material

高力黄铜
Bronze with Non-Liquid Lubricant.
Oilless lubricating.

注意 Note:

Screws not included

适配 Fixing:

Use countersunk head screw
DIN EN ISO 4762.
d= ⌀ 9 M 8 × 25
d= ⌀ 13.5 M 12 × 25

订单方式 Ordering Code (example):

Sliding Pad	=50051.
b=50 mm	= 050.
a = 80mm	= 080
Order No	=50051.050.080

NYC

50052

钢基导板, VDI 3357标准
Steel Sliding Pads, VDI 3357

Shape A

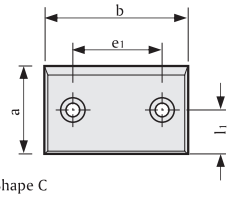

Shape B

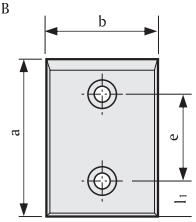

Shape C

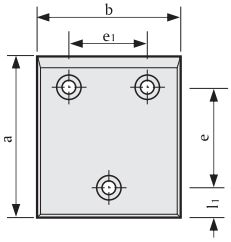

Shape D

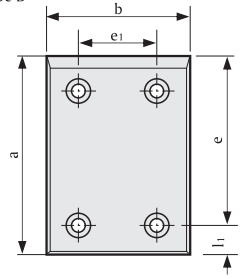



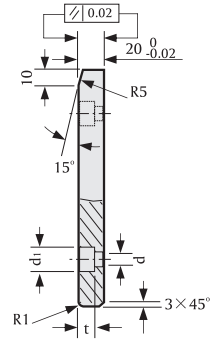

50052.

规格代码 Order No	形状 Shape	b $^{0}_{-0.2}$	a $^{0}_{-0.2}$	l_1 ±0.1	e ±0.1	e_1 ±0.1	d H13	d_1 H13	t $^{+0.5}_{0}$	Number of Screw holes
50052.050.080	B	50	80	25	30	-	9	15	9	2
100			100		50	-	13.5	20	13	
125			125		75	-				
160			160		110	-				
200			200		150	-				
50052.080.050	A	80	50	25	-	30	9	15	9	2
080	B	80	80	25	30	-	13.5	20	13	
100			100		50	-				
125			125		75	-				
160			160		110	-				
200			200		150	-				
250			250	40	170	-				
315			315	40	235	-				
50052.100.050	A	100	50	25	-	50	13.5	20	13	2
080			80	40	-	-				
100	B	100	100	25	50	-				
125			125		75	-				
160			160		110	-				
200			200		150	-				
250			250	40	170	-				
315			315	40	235	-				
50052.125.050	A	125	50	25	-	75	13.5	20	13	2
080			80	40	-					
100	C	125	100	25	50					3
125			125		75					
160			160		110					
200			200		150					
250			250	40	170					
315			315	40	235					
50052.160.050	A	160	50	25	-	110	13.5	20	13	2
080			80	40	-					
100	C	160	100	25	50					3
125			125		75					
160			160		110					
200			200		150					
250	D	160	250	40	170					4
315			315	40	235					

Description:

Sliding pads find preference in large press tools with considerable lateral work forces.

材质 Material

钢, 热处理
Steel, Surface handened.

注意 Note:

Screws not included

适配 Fixing:

Use countersunk head screw
DIN EN ISO 4762

d= Ø 9	M 8 × 25
d= ø 13.5	M 12 × 25



运动方向
Direction of Motion
Embedded non-liquid lubricant (section)

订单方式
Ordering Code (example):

Guide bush	=50052
b=50 mm =	050.
a = 80mm =	080
Order No	=50052.050.080

NYC

50055

导板， ISO 9183-1标准
Sliding Pads ISO 9183-1
Bronze with Non-Liquid Lubricant

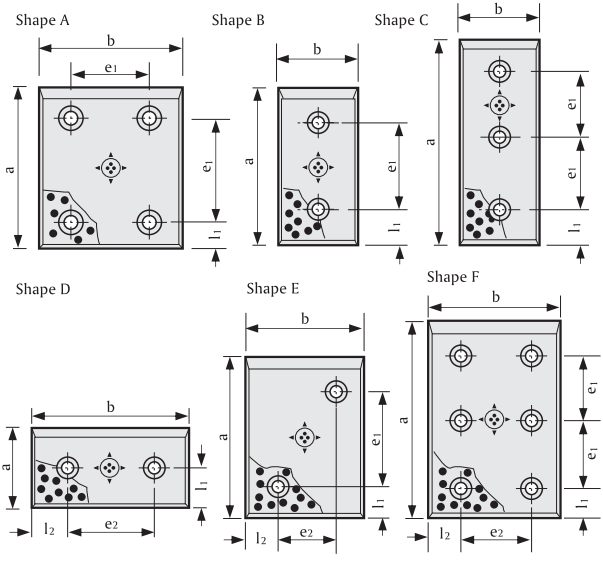

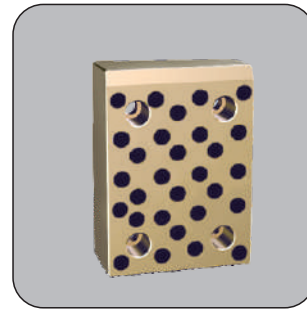

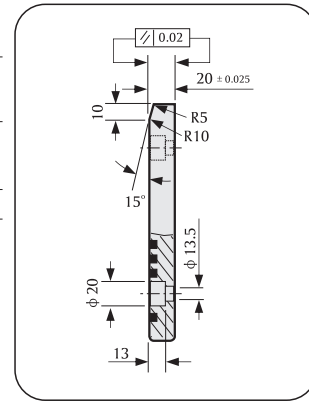

50055.

规格代码 Order No	形状 Shape	b $^{0}_{-0.2}$	a $^{0}_{-0.2}$	l_1 ±0.1	e_1 ±0.1	L_2 ±0.1	e_2 ±0.1
50055.050.080	B	50	80	20	35	25	-
100			100		55		-
125			125		80		-
160			160		115		-
200			200		155		-
250	C		250	25	100		-
50055.080.050	D	80	50	20	-	20	40
080	E		80		35		-
100			100		55		-
125			125		80		-
160	A		160		115		-
200			200		155		-
250	F		250		100		-
315			315		132		-
50055.100.050	D	100	50	25	-	20	60
080	E		80	20	35		-
100			100		55		-
125	A		125		80		-
160			160		115		-
200			200		155		-
250	F		250		100		-
315			315		132		
50055.125.050	D	125	50	25	-	20	85
080	E		80	20	35		
100	A		100		55		
125			125		80		
160			160		115		
200			200		155		
250	F		250		100		
315			315		132		
50055.160.050	D	160	50	25	-	20	120
080	A		80	20	35		
100			100		55		
125			125		80		
160			160		115		
200			200		155		
250	F		250		100		
315			315		132		

Description:

Sliding pads find preference in large press tools with considerable lateral work forces. Bronze pads with embedded non-liquid lubricant ensure maintenance free, self-lubricating service even in arduous multi-shift applications.

材质 Material

高力黄铜
Bronze with Non-Liquid Lubricant.
Oilless lubricating.

注意 Note:

Screws not included

适配 Fixing:

Use countersunk head screw
DIN EN ISO 4762 M 12 × 25.



运动方向
Direction of Motion
Embedded non-liquid lubricant (section)

订单方式
Ordering Code (example):

Sliding Pad	=50055.
B= 50 mm	= 050.
a = 80mm	= 080
Order No	=50055.050.080

NYC

50056

导板，日本标准
Sliding Pads
Bronze with Non-Liquid Lubricant

Shape A

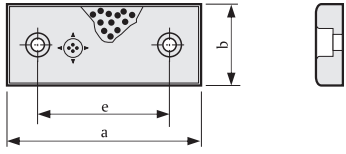

Shape B

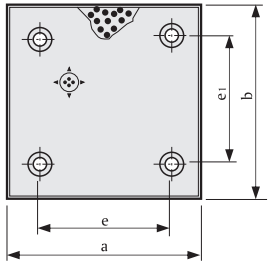

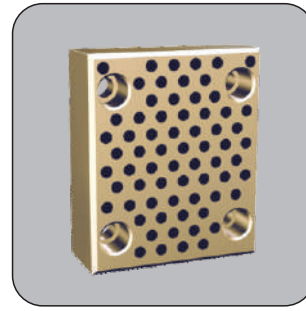

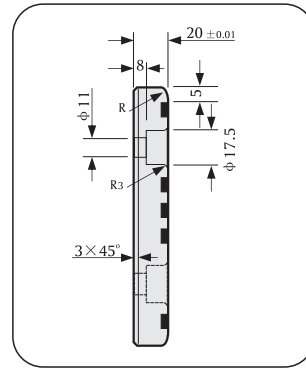

50056.

规格代码 Order No	形状 Shape	b -0.1 -0.3	a -0.1 -0.3	e1 ±0.1	e ±0.1	Number of Screw holes
50056.028.075	A	28	75	-	45	2
100			100		50	
150			150		100	
50056.038.075		38	75	-	45	
100			100		50	
150			150		100	
50056.048.075		48	75	-	45	
100			100		50	
125			125		75	
150			150		100	
200			200		150	
50056.058.075		58	75	-	45	
100			100		50	
150			150		100	
50056.075.075		75	75	-	25	
100			100		50	
125			125		75	
150			150		100	
200			200		150	
50056.100.100	B	100	100	50	50	4
125			125		75	
150			150		100	
200			200		150	
250			250		200	
300			300		200	
50056.125.125		125	125	50	75	
150			150		100	
200			200		150	
250			250		200	
300			300		200	
350			350		200	
50056.150.150		150	150	100	100	
200			200		150	
250			250		200	

材质 Material

高力黄铜
Bronze with Non-Liquid Lubricant.
Oilless lubricating.

注意 Note:

Screws not included

订单方式
Ordering Code (example):

Sliding Pad	=50056.
b= 48 mm	= 048.
a = 75mm	= 075
Order No	=50056.048.075

NYC

50057

铸铁基导板，日本标准
Sliding Pads
Iron with Non-Liquid Lubricant

Shape A

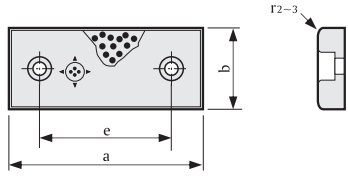

Shape B

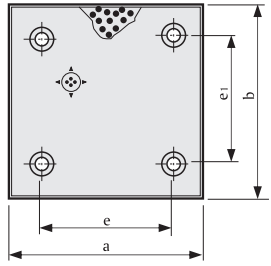

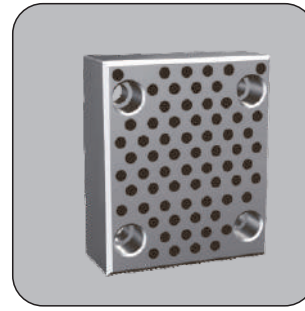

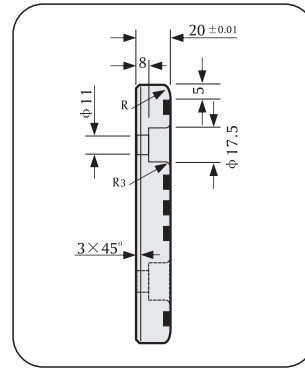

50057.

规格代码 Order No	形状 Shape	b -0.1 -0.3	a -0.1 -0.3	e1 ±0.1	e ±0.1	Number of Screw holes
50057.048.075	A	48	75	-	45	2
100			100		50	
125			125		75	
150			150		100	
200			200		150	
50057.075.075		75	75	-	25	
100			100		50	
125			125		75	
150			150		100	
200			200		150	
250			250		200	
50057.100.100	B	100	100	100	50	4
125			125		75	
150			150		100	
200			200		150	
250			250		200	
300			300		200	
50057.125.125		125	125	125	75	
150			150		100	
200			200		150	
250			250		200	
300			300		200	
50057.150.150		150	150	150	100	
200			200		150	
250			250		200	

材质 Material

铸铁（FC250）
Steel with Non-Liquid Lubricant.
Oilless lubricating.

注意 Note:

Screws not included

订单方式
Ordering Code (example):

Sliding Pad	=50057.
b= 48 mm	= 048.
a = 150mm	= 150
Order No	=50057.048.150

NYC

50058

导板, 菲亚特BR标准
FLAT BR
Sliding Pads
Bronze with Non-Liquid Lubricant

Shape A

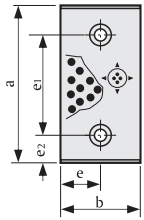

Shape B

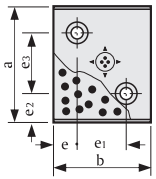

Shape C

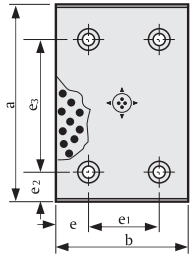

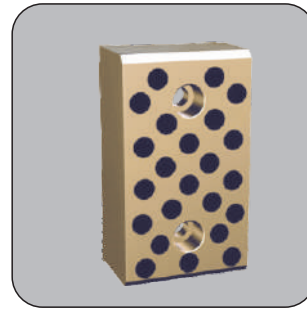

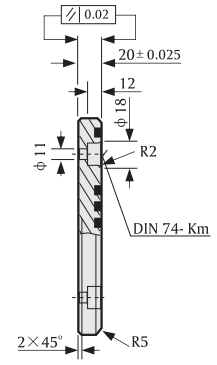

50058.

规格代码 Order No	形状 Shape	b $^{0}_{-0.2}$	a $^{0}_{-0.2}$	e ±0.1	e1 ±0.1	e2 ±0.1	e3 ±0.1	Number of Screw holes
50058.028.075	A	28	75	14	-	15	45	2
100	A		100		-	25	50	
125	A		125		-		75	
150	A		150		-		100	
50058.038.075	A	38	75	19	-	15	45	2
100	A		100		-	25	50	
125	A		125		-		75	
150	A		150		-		100	
200	A		200		-		150	
50058.048.075	A	48	75	24	-	15	45	2
100	A		100		-	25	50	
125	A		125		-		75	
150	A		150		-		100	
200	A		200		-		150	
50058.058.075	A	58	75	29	-	15	45	2
100	A		100		-	25	50	
150	A		150		-		100	
50058.075.075.1	A	75	75	37.5	-	15	45	2
50058.075.075	B	75	75	25	25	25	25	2
100.1	A		100	37.5	-		50	
100	B		100	25	25		50	
125	A		125	37.5	-		75	
150	A		150		-		100	
200	A		200		-		150	
50058.100.100	C	100	100	25	50	25	50	4
125	C		125				75	
150	C		150				100	
200	C		200				150	
250	C		250				200	
300	C		300				250	
50058.125.125	C	125	125	37.5	50	25	75	4
150	C		150				100	
200	C		200				150	
250	C		250				200	
300	C		300				250	
350	C		350				300	
50058.150.150	C	150	150	25	100	25	100	4
200	C		200				150	
250	C		250				200	
300	C		300				250	
50058.200.200	C	200	200	25	150	25	150	4
250	C		250				200	
300	C		300				250	

Description:

Sliding pads find preference in large press tools with considerable lateral work forces. Bronze pads with embedded Non-liquid lubricant ensure maintenancefree, self-lubricating service even in arduous multi- shift applications.

材质 Material

高力黄铜
Bronze with Non-Liquid Lubricant.
Oilless lubricating.

注意 Note:

Screws not included

适配 Fixing:

Use socket cap screws DIN ISO 4762
M10×25

订单方式
Ordering Code (example):

Sliding Pad	=50058.	
b=48 mm	=	048.
a=150mm	=	150
Order No	=50058.048.150	

NYC

50059

导板
Sliding Pads
Bronze with Non-Liquid Lubricant

Shape A

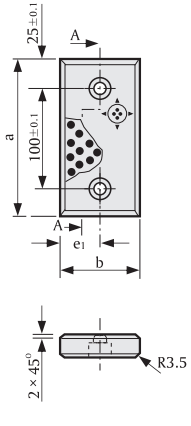

Shape B

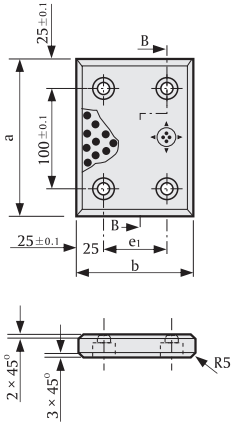



Direction of Motion
Embedded non-liquid lubricant(section)

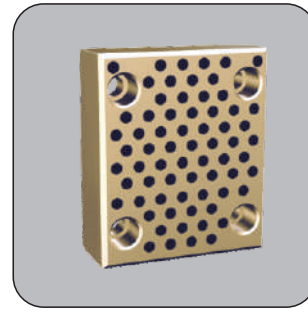

Shape A Shape B

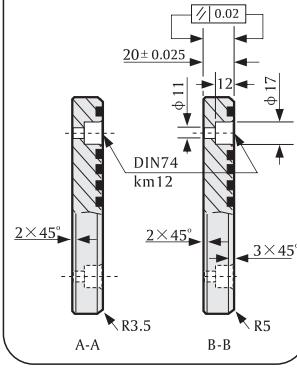

50059.

规格代码 Order No	形状 Shape	b $^{0}_{-0.2}$	a $^{0}_{-0.2}$	e1 ±0.1	Number of Screw holes
50059.038.150	A	38	150	19	2
075.150	A	75	150	37.5	2
100.150	B	100	150	50	4

订单方式 Ordering Code (example):

Sliding Pad	=50059.
b= 38 mm	= 038.
a = 150mm	= 150
Order No	=50059.038.150

Description:

Sliding pads find preference in large press tools with considerable lateral work forces. Bronze pads with embedded non-liquid lubricant ensure maintenance free, self-lubricating service even in arduous multi-shift applications.

材质 Material

高力黄铜
Bronze with Non-Liquid Lubricant.
Oilless lubricating.

注意 Note:

Screws not included

适配 Fixing:

Use countersunk head screw
DIN EN ISO 4762
M 10 × 25

NYC

50060

导板，纳姆斯标准
Sliding Pads to NAAMS
Bronze with Non-Liquid Lubricant

Shape A

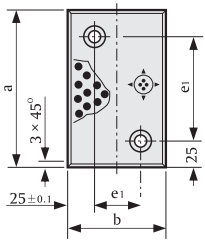

Shape B

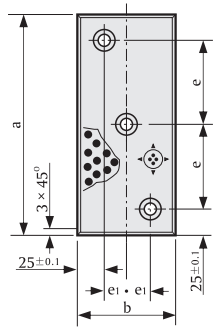



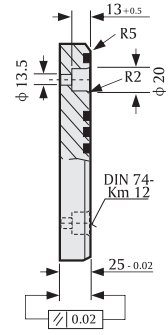

50060.

规格代码 Order No	形状 Shape	b 0 -0.2	a 0 -0.2	e ±0.1	e1 ±0.1	Number of Screw holes
50060.080.100	A	80	100	50	30	2
125	A		125	75	30	2
160	A		160	110	30	2
200	B		200	75	15	2
50060.100.125	A	100	125	75	50	2
160	A		160	110	50	2
200	B		200	75	25	2
50060.125.125	A	125	125	75	75	2

订单方式 Ordering Code (example):

Sliding Pad	=50060.	
b=80 mm	=	080.
a=200mm	=	200
Order No	=50060.080.200	

Description:

Sliding pads find preference in large press tools with considerable lateral work forces. Bronze pads with embedded non-liquid lubricant ensure maintenance free, self-lubricating service even in arduous multi-shift applications.

材质 Material

高力黄铜
Bronze with Non-Liquid Lubricant.
Oilless lubricating.

注意 Note:

Screws not included

适配 Fixing:

Use socket cap screws DIN ISO 4762
M12×30



Direction of Motion
Embedded non-liquid lubricant(section)

NYC

50060-1

导板（特殊润滑剂）
Sliding Pads
Bronze with Non-Liquid Lubricant



Shape A

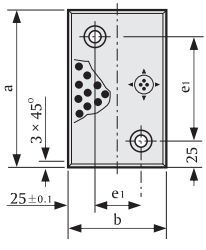

Shape B

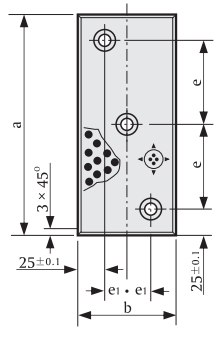

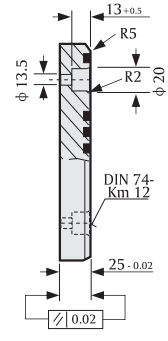

50060-1.

规格代码 Order No	形状 Shape	b 0 -0.2	a 0 -0.2	e ±0.1	e1 ±0.1	Number of Screw holes
50060-1.080.100	A	80	100	50	30	2
125	A		125	75	30	2
160	A		160	110	30	2
200	B		200	75	15	2
50060-1.100.125	A	100	125	75	50	2
160	A		160	110	50	2
200	B		200	75	25	2
50060-1.125.125	A	125	125	75	75	2

订单方式 Ordering Code (example):

Sliding Pad	=50060-1.	
b=80 mm	=	080.
a=200mm	=	200
Order No	=50060-1.080.200	

Description:

Sliding pads find preference in large press tools with considerable lateral work forces. Bronze pads with embedded non-liquid lubricant ensure maintenance free, self-lubricating service even in arduous multi-shift applications.

材质 Material

高力黄铜
Bronze with Non-Liquid Lubricant.
Oilless lubricating.

注意 Note:

Screws not included

适配 Fixing:

Use socket cap screws DIN ISO 4762
M12×30

Direction of Motion
Embedded non-liquid lubricant(section)

NYC

50061

导板
Sliding Pads
Bronze with Non-Liquid Lubricant

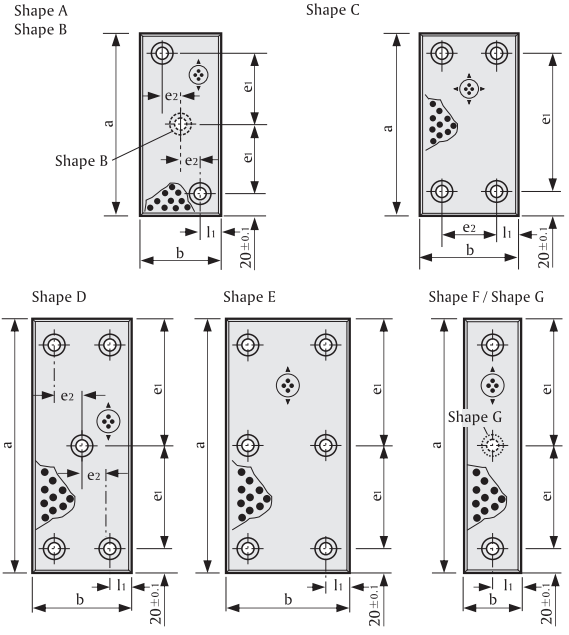



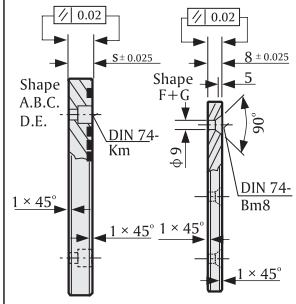

50061.

规格代码 Order No	形状 Shape	b $^{0}_{-0.1}$	s ±0.025	a $^{0}_{-0.5}$	l_1 ±0.1	e_1 ±0.1	e_2 ±0.1	Number of Screw holes	Counterbore DIN 74
50061.030.12.0100	A	30	12	100	15	60	-	2	Km 8
0160	B	30	12	160	15	60	-	3	Km 8
0250	B	30	12	250	15	105	-	3	Km 8
50061.040.08.0100	F	40	8	100	20	60	-	2	Km 8
0160	G	40	8	160	20	60	-	3	Km 8
0250	G	40	8	250	20	105	-	3	Km 8
50061.040.12.0100	A	40	12	100	20	60	-	2	Km 8
0160	B	40	12	160	20	60	-	3	Km 8
0250	B	40	12	250	20	105	-	3	Km 8
50061.040.16.0100	A	40	16	100	20	60	-	2	Km 10
0160	B	40	16	160	20	60	-	3	Km 10
0250	B	40	16	250	20	105	-	3	Km 10
50061.050.20.0100	A	50	20	100	15	60	20	2	Km 10
0160	B	50	20	160	15	60	10	3	Km 10
0250	B	50	20	250	15	105	10	3	Km 10
50061.060.16.0100	A	60	16	100	15	60	30	2	Km 10
0160	B	60	16	160	15	60	15	3	Km 10
0250	B	60	16	250	15	105	15	3	Km 10
50061.080.12.0100	A	80	12	100	20	60	40	2	Km 8
0160	C	80	12	160	20	120	40	4	Km 8
0250	D	80	12	250	20	105	20	5	Km 8
50061.080.20.0100	A	80	20	100	20	60	40	2	Km 12
0160	C	80	20	160	20	120	40	4	Km 12
0250	D	80	20	250	20	105	20	5	Km 12
50061.100.16.0100	A	100	16	100	20	60	60	2	Km 10
0160	C	100	16	160	20	120	60	4	Km 10
0250	E	100	16	250	20	105	60	6	Km 10
50061.125.20.0100	C	125	20	100	20	60	85	4	Km 12
0160	C	125	20	160	20	120	85	4	Km 12
0250	E	125	20	250	20	105	85	6	Km 12

Description:

Sliding pads find preference in large press tools with considerable lateral work forces. Bronze pads with embedded non-liquid lubricant ensure maintenance free, self-lubricating service even in arduous multi-shift applications.

材质 Material

高力黄铜
Bronze with Non-Liquid Lubricant.
Oilless lubricating.

注意 Note:

Screws not included

适配 Fixing:

Use socket cap screws DIN EN ISO 4762
or countersunk cap screws
DIN 9771/ISO 10642

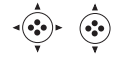

Direction of Motion
Embedded non-liquid lubricant(section)

订单方式
Ordering Code (example):

Sliding Pad	=50061.
b=30 mm	= 030.
a=100mm	= 100
Order No	=50061.030.100

NYC

50062

导板，纳姆斯W03/福特WDX1362/
欧宝U34.25标准
NAAMS W03/ FORD WDX 1362/OPEL U34.25
Sliding Pads Bronze with Non-Liquid Lubricant

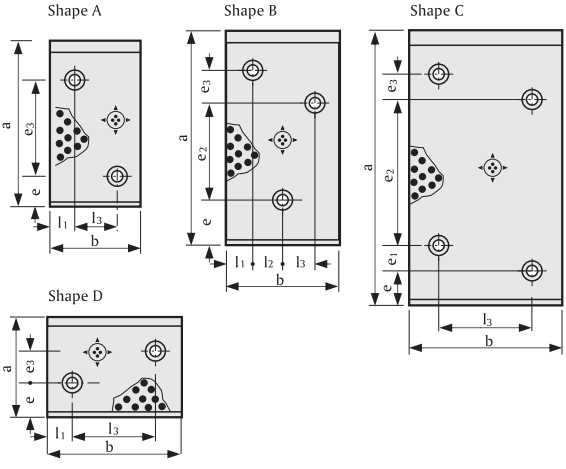



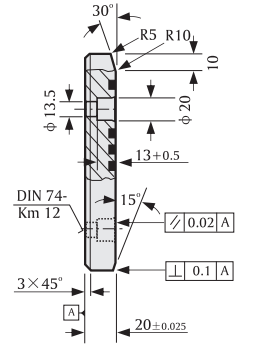

运动方向
Direction of Motion
Embedded non-liquid lubricant
(section)

50062.

规格代码 Order No	形状 Shape	b ±0.1	a $^{0}_{-0.2}$	l_1 ±0.1	l_2 ±0.1	l_3 ±0.1	e ±0.1	e_1 ±0.1	e_2 ±0.1	e_3 ±0.1	Number of Screw holes
50062.050.100	A	50	100	25	-	-	30	-	-	30	2
150	A	50	150	25	-	-	30	-	-	80	2
200	A	50	200	25	-	-	40	-	-	120	2
50062.080.100	A	80	100	20	-	40	30	-	-	30	2
150	A	80	150	20	-	40	30	-	-	80	2
200	A	80	200	20	-	40	40	-	-	120	2
250	A	80	250	20	-	40	40	-	-	170	2
315	B	80	315	20	20	20	40	-	210	25	3
50062.100.050	D	100	50	22	-	56	14	-	-	13	2
080	D	100	80	22	-	56	30	-	-	20	2
100	A	100	100	22	-	56	30	-	-	30	2
150	A	100	150	22	-	56	30	-	-	80	2
200	B	100	200	22	28	28	40	-	95	25	3
250	B	100	250	22	28	28	40	-	145	25	3
315	B	100	315	22	28	28	40	-	210	25	3
50062.125.080	D	125	80	25	-	75	30	-	-	20	2
100	A	125	100	25	-	75	30	-	-	30	2
150	A	125	150	25	-	75	30	-	-	80	2
200	B	125	200	25	37	38	40	-	95	25	3
250	B	125	250	25	37	38	40	-	145	25	3
315	C	125	315	25	-	75	40	25	185	25	4
50062.160.100	A	160	100	30	-	100	30	-	-	30	2
150	A	160	150	30	-	100	30	-	-	80	2
200	B	160	200	30	50	50	40	-	95	25	3
250	C	160	250	30	-	100	40	25	120	25	4
315	C	160	315	30	-	100	40	25	185	25	4

Description:

Sliding pads find preference in large press tools with considerable lateral work forces. Bronze pads with embedded non-liquid lubricant ensure maintenance free, self-lubricating service even in arduous multi-shift applications.

材质 Material

高力黄铜
Bronze with Non-Liquid Lubricant.
Oilless lubricating.

Execution:

Sliding faces are ground.

注意 Note:

Screws not included

适配 Fixing:

Use socket cap screws DIN ISO 4762
M12×30

订单方式
Ordering Code (example):

Sliding Pad	=50062.	
b=160 mm	=	160.
a=315mm	=	315
Order No	=50062.160.315	

NYC

50063

钢基导板，纳姆斯标准
Sliding Pads to NAAMS
Steel



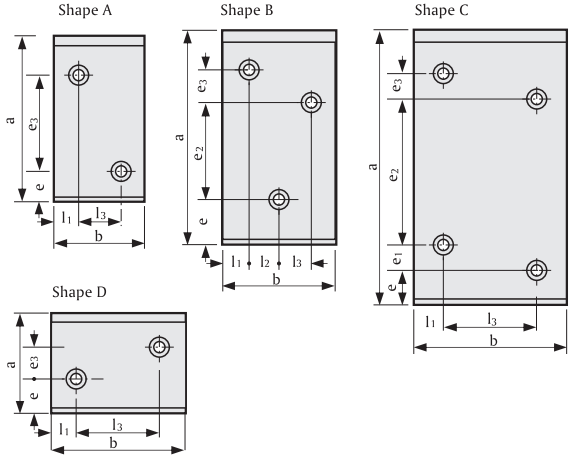

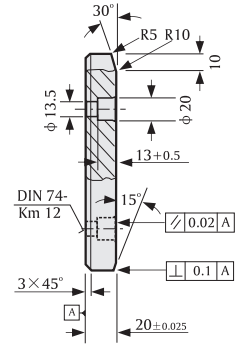

50063.

规格代码 Order No	形状 Shape	b ±0.1	a 0 -0.2	l1 ±0.1	l2 ±0.1	l3 ±0.1	e ±0.1	e1 ±0.1	e2 ±0.1	e3 ±0.1	Number of Screw holes
50063.050.100	A	50	100	25	-	-	30	-	-	30	2
150	A	50	150	25	-	-	30	-	-	80	2
200	A	50	200	25	-	-	40	-	-	120	2
50063.080.100	A	80	100	20	-	40	30	-	-	30	2
150	A	80	150	20	-	40	30	-	-	80	2
200	A	80	200	20	-	40	40	-	-	120	2
250	A	80	250	20	-	40	40	-	-	170	2
315	B	80	315	20	20	20	40	-	210	25	3
50063.100.050	D	100	50	22	-	56	14	-	-	13	2
080	D	100	80	22	-	56	30	-	-	20	2
100	A	100	100	22	-	56	30	-	-	30	2
150	A	100	150	22	-	56	30	-	-	80	2
200	B	100	200	22	28	28	40	-	95	25	3
250	B	100	250	22	28	28	40	-	145	25	3
315	B	100	315	22	28	28	40	-	210	25	3
50063.125.080	D	125	80	25	-	75	30	-	-	20	2
100	A	125	100	25	-	75	30	-	-	30	2
150	A	125	150	25	-	75	30	-	-	80	2
200	B	125	200	25	37	38	40	-	95	25	3
250	B	125	250	25	37	38	40	-	145	25	3
315	C	125	315	25	-	75	40	25	185	25	4
50063.160.100	A	160	100	30	-	100	30	-	-	30	2
150	A	160	150	30	-	100	30	-	-	80	2
200	B	160	200	30	50	50	40	-	95	25	3
250	C	160	250	30	-	100	40	25	120	25	4
315	C	160	315	30	-	100	40	25	185	25	4

Description:

Sliding pads find preference in large press tools with considerable lateral work forces.

材质 Material

钢，表面热处理
Steel, Surface handened.

注意 Note:

Screws not included

适配 Fixing:

Use socket cap screws DIN EN ISO 4762
M12×30

订单方式
Ordering Code (example):

Sliding Pad	=50063.	
b=160 mm	=	160.
a=315mm	=	315
Order No	=50063.160.315	

NYC

50064

导板, 标致雪铁龙标准
PSA.E24.52.518G
AFNOR/ISO 9183-2 Sliding Pads
Bronze with Non-Liquid Lubricant

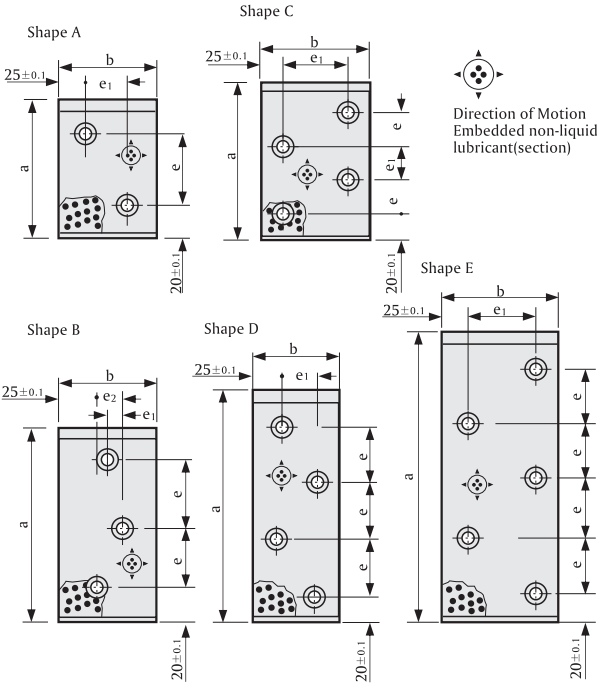



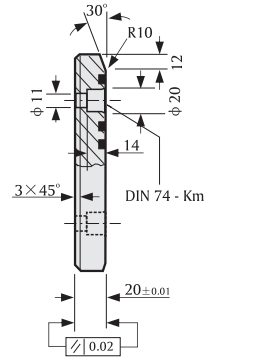

50064.

规格代码 Order No	形状 Shape	b 0 -0.2	a 0 -0.2	e ±0.1	e1 ±0.1	e2 ±0.1	e3 ±0.1	Number of Screw holes
50064.070.100	A	70	100	50	20	-	-	2
150	B	70	150		10	20	-	3
200	D	70	200		20	-	-	4
50064.100.150	C	100	150	25	50	-	50	4
200	D	100	200	50	50	-	-	4
250	E	100	250		50	-	-	5
50064.150.200	D	150	200		100	-	-	4
250	E	150	250		100	-	-	5

Description:

Sliding pads find preference in large press tools with considerable lateral work forces. Bronze with integral solid lubricant guarantees low maintenance, even if the plates are in continuous use.

材质 Material

高力黄铜
Bronze with Non-Liquid Lubricant.
Oilless lubricating.

注意 Note:

Screws not included

适配 Fixing:

Use socket cap screws DIN EN ISO 4762 M10×25

订单方式
Ordering Code (example):

Sliding Pad	=50064.
b=100 mm	= 100.
a=200mm	= 200
Order No	=50064.100.200

50064

导板, 标致雪铁龙标准
PSA.E24.52.518G
AFNOR/ISO 9183-2 Sliding Pads
Bronze with Non-Liquid Lubricant

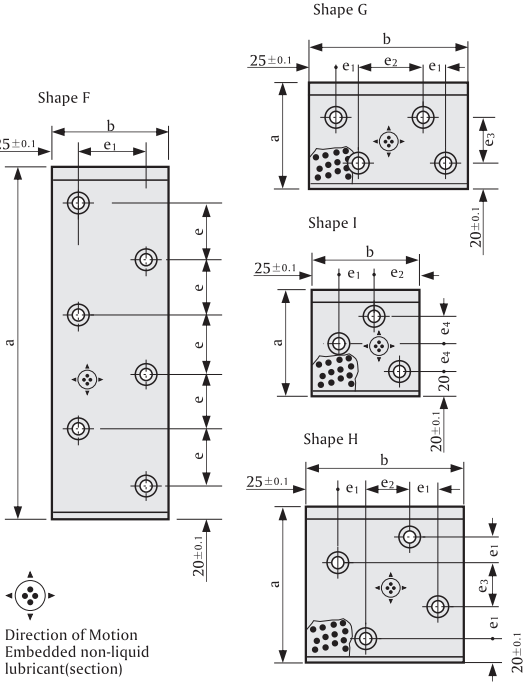

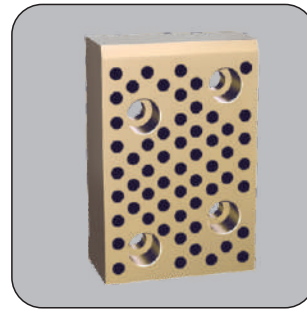

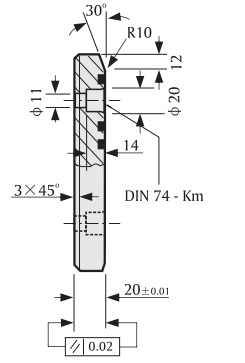

50064.

规格代码 Order No	形状 Shape	b $^{0}_{-0.2}$	a $^{0}_{-0.2}$	e1 ±0.1	e4 ±0.1	e ±0.1	e3 ±0.1	e2 ±0.1	Number of Screw holes
50064.100.100	I	100	100	30	25	-	-	20	3
300	F	100	300	50	-	50	-	-	6
50064.150.100	G	150	100	25	-	-	50	50	4
150	H	150	150	25	-	-	-	50	4
300	F	150	300	100	-	50	-	-	6
50064.200.100	G	200	100	50	-	-	50	50	4

Description:
Sliding pads find preference in large press tools with considerable lateral work forces. Bronze pads with embedded non-liquid lubricant ensure maintenance free, self-lubricating service even in arduous multi-shift applications.

材质 Material
高力黄铜
Bronze with Non-Liquid Lubricant.
Oilless lubricating.

注意 Note:
Screws not included

适配 Fixing:
Use socket cap screws DIN ISO 4762
M12×30

订单方式
Ordering Code (example):

Sliding Pad	=50064.
b=100 mm	= 100.
a=200mm	= 200
Order No	=50064.100.200

NYC

50066

导板，VDI 3357标准
Sliding Pads, VDI 3357
Bronze with Non-Liquid Lubricant

Shape A

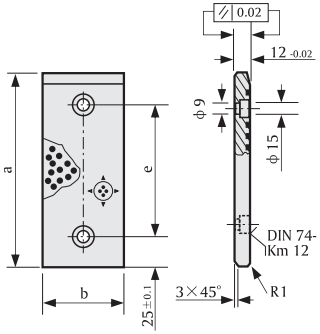

Shape B

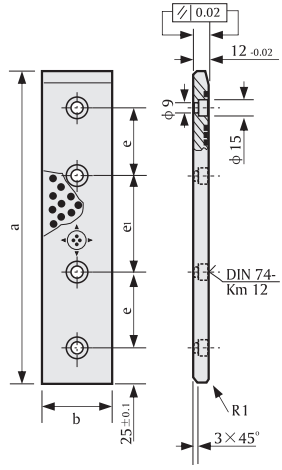



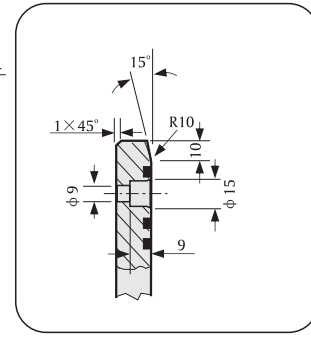

50066.

规格代码 Order No	形状 Shape	b $^{0}_{-0.2}$	a $^{0}_{-0.2}$	e ±0.1	e_1 ±0.1	Number of Screw holes
50066.030.080	A	30	80	30		2
100			100	50		2
125			125	75		2
160			160	110		2
200			200	150		2
50066.040.080		40	80	30		2
100			100	50		2
125			125	75		2
160			160	110		2
200			200	150		2
50066.050.080		50	80	30		2
100			100	50		2
125			125	75		2
160			160	110		2
200			200	150		2
50066.050.250	B	50	250	60	80	4
300			300	80	90	4
350			350	100	100	4
400			400	120	110	4
50066.060.080	A	60	80	30		2
100			100	50		2
125			125	75		2
160			160	110		2
200			200	150		2
50066.080.080		80	80	30		2
100			100	50		2
125			125	75		2
160			160	110		2
200			200	150		

Description:
Guide pads find preference in large press tools with considerable lateral work forces. Bronze pads with embedded non-liquid lubricant ensure maintenance free, self-lubricating service even in arduous multi-shift applications.

材质 Material
高力黄铜
Bronze with Non-Liquid Lubricant.
Oilless lubricating.

注意 Note:
Screws not included

适配 Fixing:
Use socket cap screws DIN EN ISO 4762 M8×25



Direction of Motion
Embedded non-liquid lubricant(section)

订单方式
Ordering Code (example):

Sliding Pad	=50066.
b=30 mm	= 030.
a=80mm	= 080
Order No	=50066.030.080

NYC

50067

钢基导板，VDI 3357标准
Sliding Pads, VDI 3357
Steel



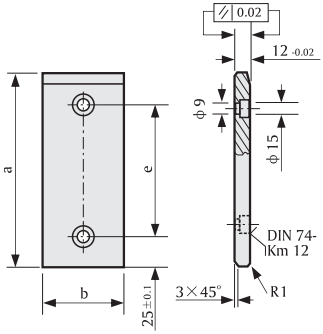

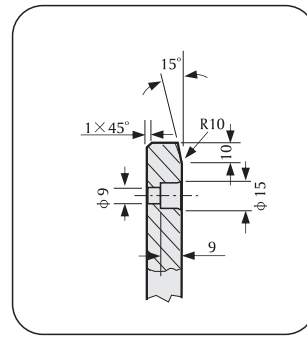

50067.

规格代码 Order No	b $^{0}_{-0.2}$	a $^{0}_{-0.2}$	e ±0.1	Number of Screw holes
50067.030.080	30	80	30	2
100		100	50	2
125		125	75	2
160		160	110	2
200		200	150	2
50067.040.080	40	80	30	2
100		100	50	2
125		125	75	2
160		160	110	2
200		200	150	2
50067.050.080	50	80	30	2
100		100	50	2
125		125	75	2
160		160	110	2
200		200	150	2
50067.060.080	60	80	30	2
100		100	50	2
125		125	75	2
160		160	110	2
200		200	150	2
50067.080.080	80	80	30	2
100		100	50	2
125		125	75	2
160		160	110	2
200		200	150	2

Description:
Sliding pads find preference in large press tools with considerable lateral work forces.

材质 Material
钢，表面热处理
Steel, Surface handened.

注意 Note:
Screws not included

适配 Fixing:
Use countersunk head screw
DIN EN ISO 4762 M8 × 25

订单方式
Ordering Code (example):

Sliding Pad	=	50067.
b=30 mm	=	030.
a=80mm	=	080
Order No	=	50067.030.080

NYC

50068

导板, VDI 3357标准
Sliding Pads, VDI 3357
Bronze with Non-Liquid Lubricant

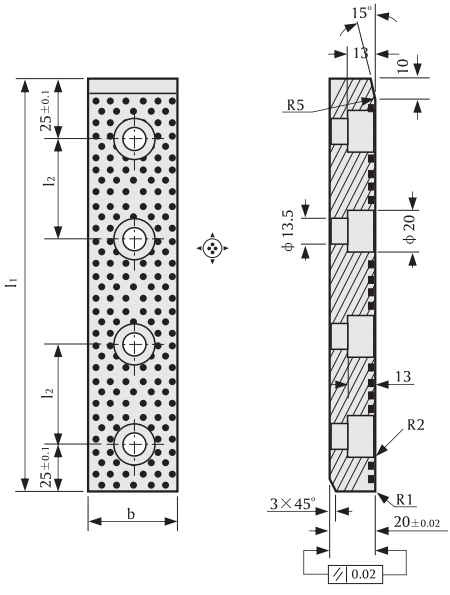



Description:
Sliding pads find preference in large press tools with considerable lateral work forces. Bronze with integral solid lubricant guarantees low maintenance, even if the plates are in continuous use.

材质 Material
高力黄铜
Bronze with Non-Liquid Lubricant.
Oilless lubricating.

注意 Note:
Screws not included

适配 Fixing:
Use socket cap screws DIN EN ISO 4762
M12×25

50068.

规格代码 Order No	b $^{0}_{-0.2}$	l_1 $^{0}_{-0.2}$	l_2 ±0.1	Number of Screw holes
50068.050. 250	50	250	60	4
300		300	80	
350		350	100	
400		400	120	
450		450	140	
500		500	150	
50068.080. 250	80	250	60	
300		300	80	
350		350	100	
400		400	120	
450		450	140	
500		500	150	
50068.100. 450	100	450	140	
500		500	150	
50068.125. 450	125	450	140	
500		500	150	

订单方式 Ordering Code (example):

Sliding Pad	=50068.
b=50 mm	= 050.
l_1=250mm	= 250
Order No	=50068.050.250

NYC

50069

滑板，（双侧面自润滑）VDI 3357标准
Guide Bars, VDI 3357 with two Sliding Surfaces Bronze with Non-Liquid Lubricant

Shape A

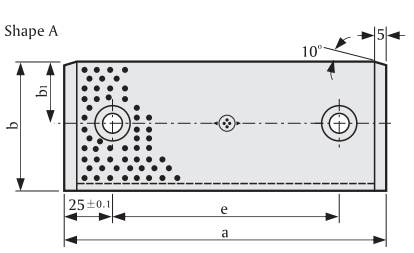

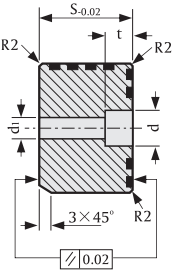



Direction of Motion
Embedded non-liquid lubricant(section)

Shape B

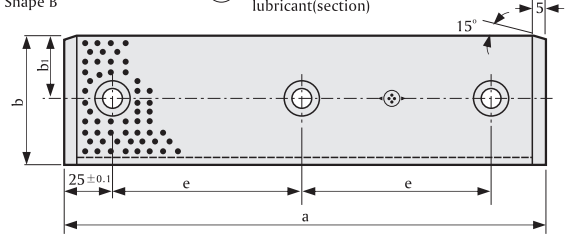

材质 Material
高力黄铜
Bronze with Non-Liquid Lubricant.
Oilless lubricating.

注意 Note:
Screws not included

适配 Fixing:
Use socket cap screws
DIN EN ISO 4762
M8 × 20
M10 × 25
M12 × 35
M12 × 45

50069.

规格代码 Order No	形状 Shape	a $^{0}_{-0.2}$	b $^{0}_{-0.2}$	s $^{0}_{-0.2}$	b_1 ±0.1	e ±0.1	d H13	d_1 H13	t $^{+0.5}_{0}$	Number of Screw holes
50069.025.012. 0110	A	110	25	12	12,5	60	15	9	8.5	2
0120		120				70				
50069.025.015 0110	A	110	25	15	12,5	60	18	11	10.5	2
0120		120				70				
50069.060.030 0125	A	125	60	30	**30**	75	20	13.5	13	2
0150		150				100				
0160		160				110				
0200	B	200				75				3
50069.060.040 0125	A	125	60	40	**30**	75	20	13.5	13	2
0150		150				100				
0160		160				110				
0200	B	200				75				3

订单方式 Ordering Code (example):

Sliding Pad	=	50069.
b=60 mm	=	060.
S=30 mm	=	030.
a=200mm	=	0200
Order No	=	50069.060.030.0200

NYC

50070

滑板，（三侧面自润滑）
Guide Bars with three Sliding Surfaces Bronze with Non-Liquid Lubricant

Shape A

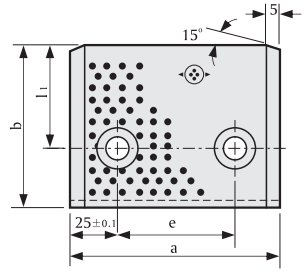

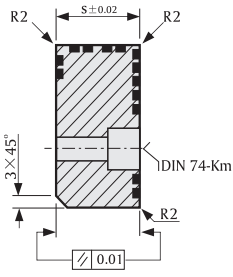

Shape B

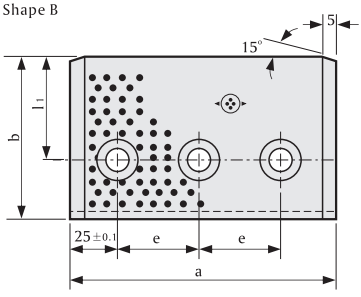



Direction of Motion
Embedded non-liquid lubricant(section)



材质 Material

高力黄铜
Bronze with Non-Liquid Lubricant.
Oilless lubricating.

注意 Note:

Screws not included

适配 Fixing:

Use countersunk head screw
DIN EN ISO 4762 M8 × 25

50070.

规格代码 Order No	形状 Shape	a $^{0}_{-0.2}$	b ±0.02	s ±0.02	e ±0.1	l_1 ±0.1	DIN 74 Km	Number of Screw holes
50070.070.032. 0125	A	125	70	32	75	40	12	2
0150	A	150	70	32	100	40	12	2
0200	B	200	70	32	75	40	12	3
50070.090.045 0125	A	125	90	45	75	55	16	2
0150	B	150	90	45	50	55	16	3
0200	B	200	90	45	75	55	16	3

订单方式 Ordering Code (example):

Sliding Pad	=50070.	
b=70 mm	=	070.
S=32 mm	=	032.
a=200mm	=	0200
Order No	=50070.070.032.0200	

NYC

50071

滑板，（双侧面自润滑）
Guide Bars with two Sliding Surfaces
Bronze with Non-Liquid Lubricant

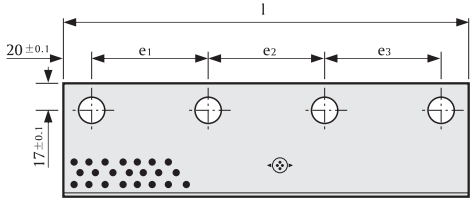

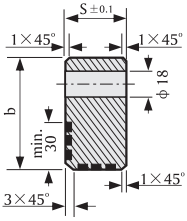



材质 Material

高力黄铜
Bronze with Non-Liquid Lubricant.
Oilless lubricating.

注意 Note:

Screws not included

50071.

规格代码 Order No	b ±0.2	s ±0.1	l $^{0}_{-0.2}$	e_1 ±0.1	e_2 ±0.1	e_3 ±0.1	Number of Screw holes
50071.065.040. 0150	65	40	150	110	-	-	2
0200			200	80	80	-	3
0250			250	105	105	-	3
0300			300	90	80	90	4
0350			350	105	100	105	4
50071.065.065. 0150	65	65	150	110	-	-	2
0200			200	80	80	-	3
0250			250	105	105	-	3
0300			300	90	80	90	4
0350			350	105	100	105	4

订单方式 Ordering Code (example):

Sliding Pad	=	50071.
b=65 mm	=	065.
S=40 mm	=	040.
l=250mm	=	0250
Order No	=	50071.065.040.0250

NYC

50072

滑板，（四侧面自润滑）
Guide Bars with four Sliding Surfaces Bronze with Non-Liquid Lubricant

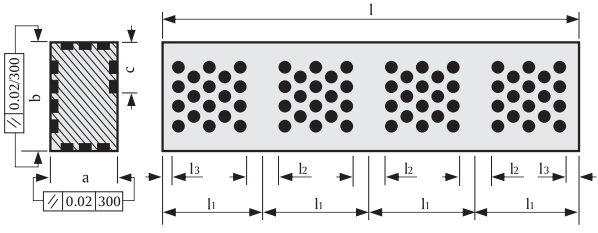

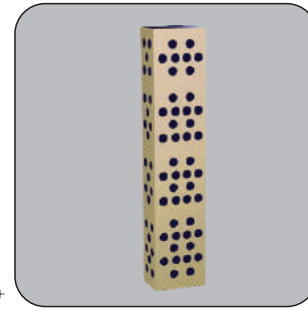

Surfaces without Non-liquid Lubricant: rotating

50072.

规格代码 Order No	a ±0.025	b ±0.025	c	l ±1	l1	l2	l3
50072.015.010. 075	10.3	15.3	5	75	25	6	3
100				100			
125				125			
150				150			
175				175			
200				200			
225				225			
250				250			
275				275			
300				300			
50072.025.015. 105	15.3	25.3	8	105	35	8	4
140				140			
175				175			
210				210			
245				245			
280				280			
315				315			
350				350			
385				385			
420				420			
455				455			
490				490			
50072.035.025. 135	25.3	35.3	12	135	45	10	5
180				180			
225				225			
270				270			
315				315			
360				360			
405				405			
450				450			
50072.045.035. 165	35.3	45.3	16	165	55	12	6
220				220			
275				275			
330				330			
385				385			
440				440			
495				495			

材质 Material

高力黄铜
Bronze with Non-Liquid Lubricant.
Oilless lubricating.

Direction of Motion
Embedded non-liquid lubricant(section)

订单方式
Ordering Code (example):

Sliding Pad	=50072
b=25.3 mm =	025.
a=15.3mm =	015.
l= 105mm =	105
Order No	=50072.025.015.105

NYC

50073

滑块，（ 单面自润滑）
Guide Bars with one Sliding Surfaces Bronze with Non-Liquid Lubricant

Shape A

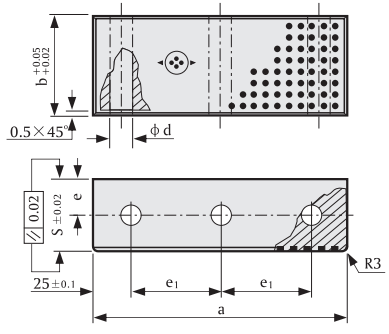

Shape B

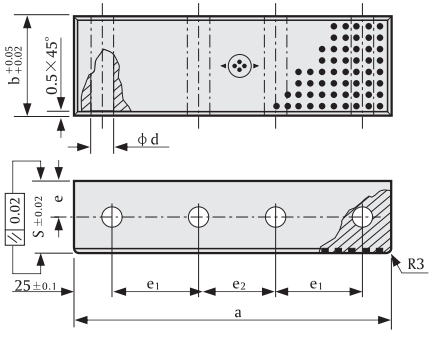



Description:

Sliding pads find preference in large press tools with considerable lateral work forces. Bronze pads with embedded non-liquid lubricant ensure maintenance free, self-lubricating service even in arduous multi-shift applications.

材质 Material

高力黄铜
Bronze with Non-Liquid Lubricant.
Oilless lubricating.

注意 Note:

Screws not included



Direction of Motion
Embedded non-liquid lubricant(section)

50073.

规格代码 Order No	Shape	b +0.05 +0.02	s ±0.02	a 0 -0.2	e ±0.1	e1 ±0.1	e2 ±0.1	d	Number of Screw holes
50073.030.040.150	A	30	40	150	20	50	-	14	3
200	A			200		75	-		3
250	B			250		75	50		4
50073.040.040.150	A	40	40	150	20	50	-	14	3
200	A			200		75	-		3
250	B			250		75	50		4
50073.045.050.150	A	45	50	150	25	50	-	18	3
200	A			200		75	-		3
250	B			250		75	50		4
50073.055.050.150	A	55	50	150	25	50	-	18	3
200	A			200		75	-		3
250	B			250		75	50		4
50073.060.050.150	A	60	50	150	25	50	-	18	3
200	A			200		75	-		3
250	B			250		75	50		4
50073.070.050.150	A	70	50	150	25	50	-	18	3
200	A			200		75	-		3
250	B			250		75	50		4

订单方式
Ordering Code (example):

Sliding Pad	=50073.
b=30 mm	= 030.
a=150mm	= 150.
s=40mm	**= 040**
Order No	=50073.030.150 .040

NYC

50074

滑块，（ 三侧面自润滑）
Guide Bars with three Sliding Surfaces Bronze with Non-Liquid Lubricant

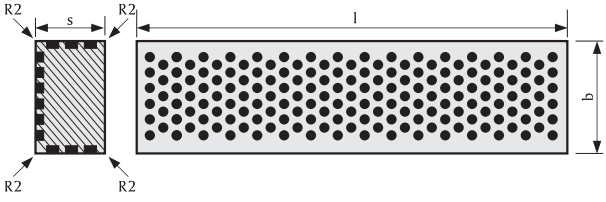

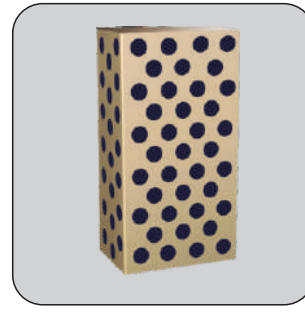

材质 Material

高力黄铜
Bronze with Non-Liquid Lubricant.
Oilless lubricating.

Direction of Motion
Embedded non-liquid lubricant(section)

50074.

规格代码 Order No	b $^{0}_{-0.015}$	s ± 0.015	l $^{0}_{-0.2}$
50074.025.016.080	25	16	80
100			100
125			125
50074.040.025.125	40	25	125
160			160
200			200
50074.063.040.200	63	40	200
250			250
315			315

订单方式 Ordering Code (example):

Sliding Pad	=50074.
b=25 mm	= 025.
s=16mm	= 016.
l= 80mm	= 080
Order No	=50074.025.016.080

NYC

50075
50075-1

导座 / 外导板, 福特/奥迪/VDI3387标准
FORD WDX 1360/ AUDI 39V 1159
Guide Brackets to VDI 3387
Bronze with Non-Liquid Lubricant
Steel with Non-Liquid Lubricant

Shape A

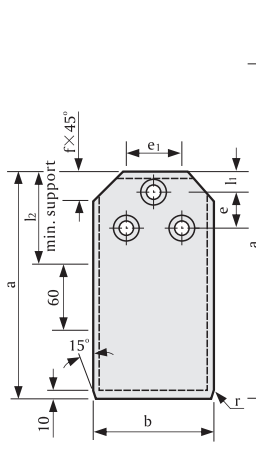

Shape B

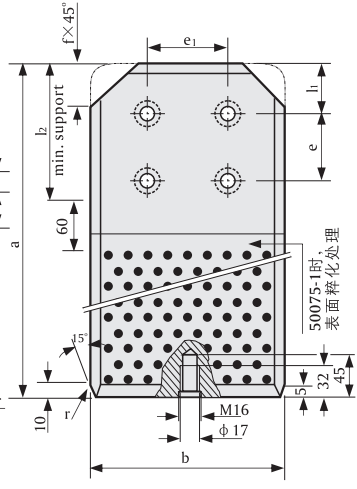



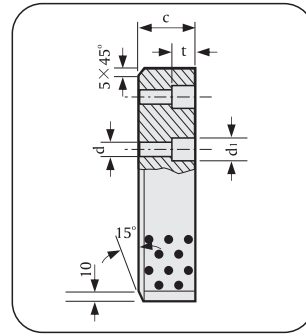

50075. / 50075-1.

规格代码	形状	b	a	l1	l2	e	e1	d	d1	f	c	t	r	Number of
Order No	Shape	f7	$^{0}_{-0.3}$	±0.2	±0.2	±0.1	±0.1				±0.025			Screw holes
50075.063.180	A	63	180	20	90	50	36	14	20	18	36	16	16	3
200			200											
224			224											
50075.071.180	A	71	180											
200			200											
224			224											
50075.090.200	A	90	200	20	100	50	50	18	26	28	45	21	25	3
224			224											
250			250											
50075.112.200	A	112	200											
224			224											
250			250											
50075.140.315	B	140	315	40	150	80	90	22	33	36	45	25.5	31.5	4
400			400											
50075.140.315	B	140	315	40	150	80	90	22	33	36	56	25.5	31.5	4
400			400											
50075.190.315	B	190	315	40	150	80	90	22	33	36	45	25.5	31.5	4
400														
50075.190.315	B	190	315	40	150	80	90	22	33	36	56	25.5	31.5	4
400			400											
50075.240.500	B	240	500	40	250	160	160	26	40	36	56	30.5	31.5	4
630			630											

订单方式 Ordering Code(example):			
Sliding Pad= 50075.		Sliding Pad= 50075-1.	
b=63mm =	063.	b=63mm =	063.
c=36mm =	036.	c=36mm =	036.
a=180mm =	180	a=180mm =	180
Order No =50075.063.036.180			

材质 Material

50075
高力黄铜
Bronze with Non-Liquid Lubricant.
Oilless lubricating.

50075-1
钢
Steel

注意 Note:

Screws not included

适配 Fixing:

Use countersunk head screw
DIN EN ISO 4762

50075.063	M12 × 40
50075.071	M12 × 40
50075.090	M16 × 50
50075.112	M16 × 50
50075.140	M20 × 50
50075.190	M20 × 70
50075.240	M24 × 80



运动方向
Direction of Motion
Embedded non-liquid lubricant
(section)

NYC

50076

中间导块
Slide Centre Guides
Bronze with Non-Liquid Lubricant

Shape A

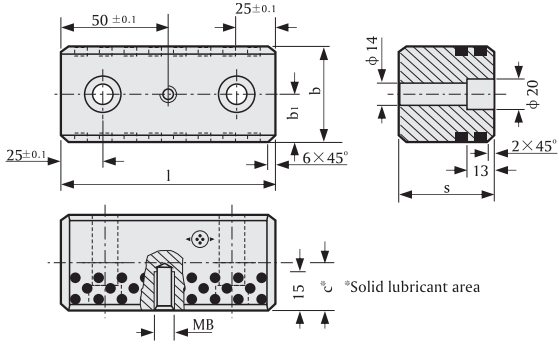

Shape B

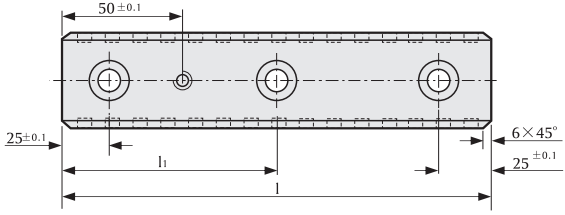



50076.

规格代码 Order No	形状 Shape	b $^{0}_{-0.02}$	l $^{0}_{-1.0}$	s $^{0}_{-0.01}$	b_1 ±0.1	l_1 ±0.1	c	Number of Screw holes
50076.030.100.030	A	30	100	30	15	-	18	2
150			150			-		
200	B		200			100		3
250			250			125		
300			300			150		
350			350			175		
50076.040.100.030	A	40	100	30	20	-	18	2
150			150			-		
200	B		200			100		3
250			250			125		
300			300			150		
350			350			175		
50076.040.100.040.	A	40	100	40	40	-	20	2
150			150			-		
200	B		200			100		3
250			250			125		
300			300			150		
350			350			175		

材质 Material

高力黄铜
Bronze with Non-Liquid Lubricant.
Oilless lubricating.

注意 Note:

Screws not included

适配 Fixing:

Machine screws
DIN EN ISO 4762
M12 × 50
M12 × 60



运动方向
Direction of Motion
Embedded non-liquid lubricant
(section)

订单方式
Ordering Code (example):

Sliding Pad	=50076.
b=30 mm	= 030.
l=100mm	= 100.
S=30mm	= 030
Order No	=50076.030.100.030

NYC

50077

强制复位导向滑块
Cam Forced Return Plates

Shape A

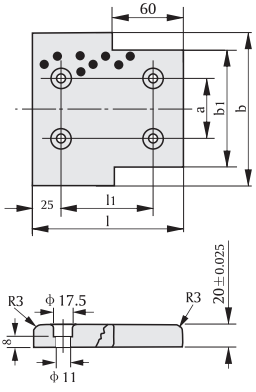

Shape B

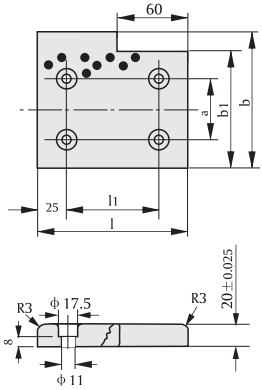

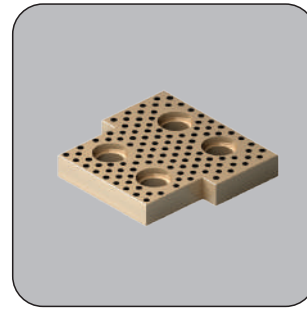

运动方向
Direction of Motion
Embedded non-liquid lubricant
(section)

材质 Material

高力黄铜
Bronze with Non-Liquid Lubricant.
Oilless lubricating.

注意 Note:

Screws not included

50077.

b1	100	100	125	125	125	150	150	100	100	125	125	125	150	150
l	125	150	150	200	250	200	250	125	150	150	200	250	200	250
b	130	130	155	155	155	180	180	115	115	140	140	140	165	165
a	50	50	75	75	75	100	100	50	50	75	75	75	100	100
l1	75	100	100	150	200	150	200	75	100	100	150	200	150	200
Shape	A	A	A	A	A	A	A	B	B	B	B	B	B	B

订单方式 Ordering Code (example):

Cam forced deturn plates	=	50077.
b = 130 mm	=	130.
l=125mm	=	125
Order No	=50077.130.125	

NYC

50078

斜锲镶板，福特 / 纳姆斯 / VDI 3357 标准
FORD WDX 760/ NAAMS W21-W31
Overrun Cams, VDI 3357
for Cam Drivers and Slides
Bronze with Non-Liquid Lubricant

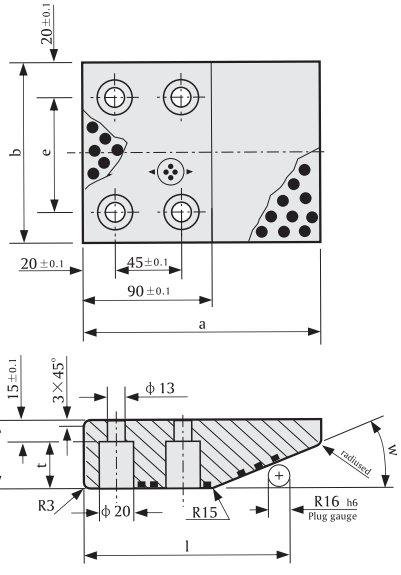

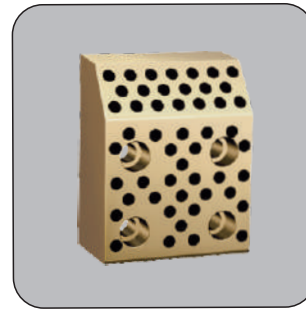

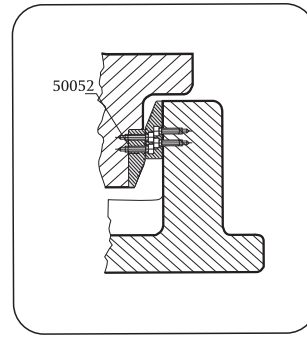

50078.

规格代码 Order No	b $^{0}_{-0.2}$	a $^{0}_{-0.2}$	s ±0.01	e ±0.01	t ±0.02	w	l
50078.100.170.045	100	170	45	60	30	20°	143.37
125.170.045	125			85			
150.170.045	150			110			
50078.100.150.045	100	150	45	60	30	30°	127.86
170.060		170	60		45		
50078.125.150.045	125	150	45	85	30		
170.060		170	60		45		
50078.150.150.045	150	150	45	110	30		
170.060		170	60		45		

材质 Material

高力黄铜
Bronze with Non-Liquid Lubricant.
Oilless lubricating.

注意 Note:

Screws not included

适配 Fixing:

Use socket cap screws DIN EN ISO 4762
M12×40

订单方式
Ordering Code (example):

Overrun Cam	=	50078.
b=100 mm	=	100.
a=150mm	=	150.
S=45mm	=	045
Order No	=	50078.100.150.045

50079

斜锲镶板, 福特 / 纳姆斯 / VDI 3357 标准
FORD WDX 760/ NAAMS W21-W31
Overrun Cams, VDI 3357, Steel
for Cam Drivers and Slides

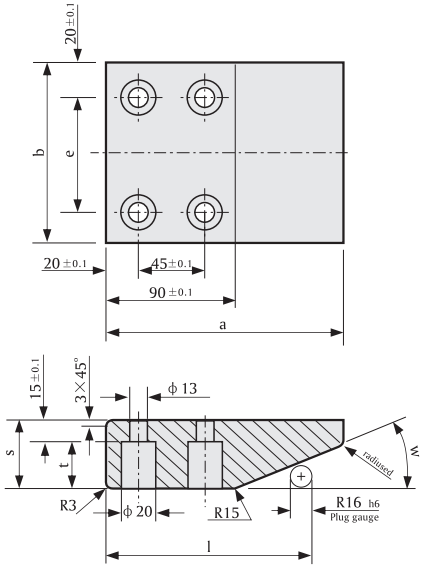



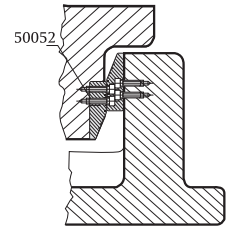

50079.

规格代码 Order No	b $^{0}_{0.2}$	a $^{0}_{0.2}$	s ±0.01	e ±0.01	t ±0.02	w	l
50079.100.170.045	100	170	45	60	30	20°	143.37
125.170.045	125			85			
150.170.045	150			110			
50079.100.150.045	100	150	45	60	30	30°	127.86
170.060		170	60		45		
50079.125.150.045	125	150	45	85	30		
170.060		170	60		45		
50079.150.150.045	150	150	45	110	30		
170.060		170	60		45		

材质 Material

钢，表面热处理
Steel, through-hardened

注意 Note:

Screws not included

适配 Fixing:

Use socket cap screws DIN EN ISO 4762
M12×40

订单方式
Ordering Code (example):

Overrun Cam	=50079.	
b=100 mm	=	100.
a=150mm	=	150.
S=45mm	=	045
Order No	=50079.100.150.045	

NYC

50080

导板，菲亚特BR标准
Sliding Pads, FIAT BR
Bronze with Non-Liquid Lubricant

Shape 1

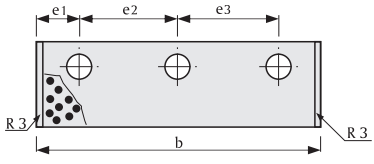

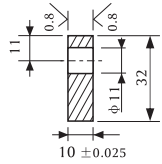

Shape 2

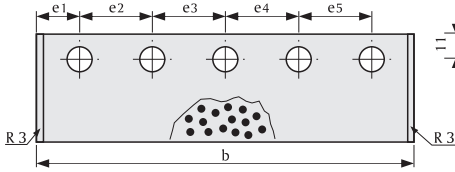

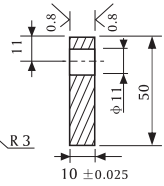

Shape 3

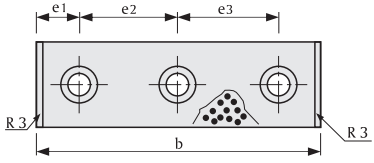

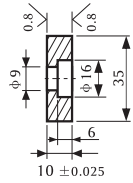



运动方向
Direction of Motion
Embedded non-liquid lubricant
(section)

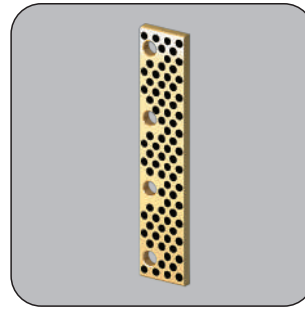

材质 Material

高力黄铜
Bronze with Non-Liquid Lubricant.
Oilless lubricating.

注意 Note:

Screws not included

50080.

	BR20	BR21	BR22	BR23	BR24	BR25	BR26
b	100	150	200	250	300	100	150
e1	20	20	20	20	20	20	20
e2	60	55	55	70	65	60	55
e3	-	55	50	70	65	-	55
e4	-	-	55	70	65	-	-
e5	-	-	-	-	65	-	-
Shape	1	1	2	2	2	3	3
No. Screw holes	2	3	4	4	5	2	3

订单方式 Ordering Code (example):

Sliding Pads	=50080.	
b=100 mm	=	100.
Shape =1	=	001
Order No	=50080.100.001	

NYC

50081

导板，菲亚特BR标准
Sliding Pads, FIAT BR
Bronze with Non-Liquid Lubricant

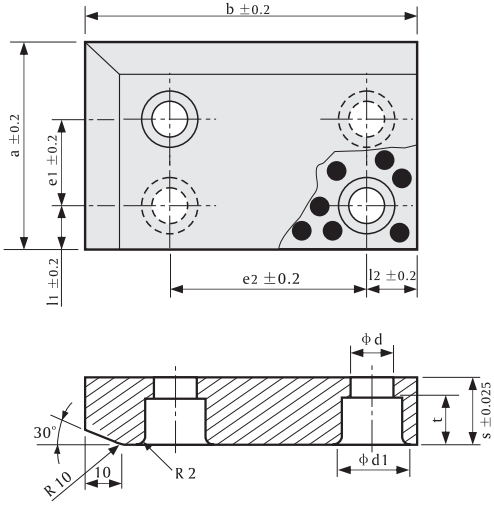

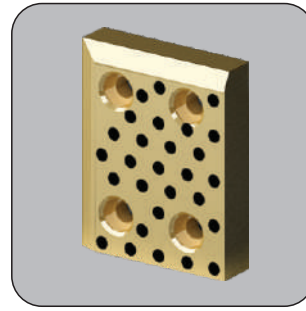

材质 Material

高力黄铜
Bronze with Non-Liquid Lubricant.
Oilless lubricating.

注意 Note:

Screws not included



运动方向
Direction of Motion
Embedded non-liquid lubricant
(section)

50081.

FIAT BR	BR10	BR11	BR12
b	100	125	150
a	75	100	125
e_2	60	73	93
l_2	15	20	25
l_1	15	20	25
e_1	35	48	68
s	18	25	25
t	12	14	14
d	11	13	13
d_1	18	20	20
No. Screw holes	2	4	4

订单方式 Ordering Code (example):

Sliding Pads	=50081.
b=100 mm	= 100.
a=75 mm	= 075
Order No	=50081.100.075

NYC

50082

导板，菲亚特BR标准
Sliding pads, FIAT BR
Bronze with Non-Liquid Lubricant

Shape A

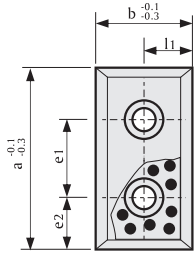

Shape B

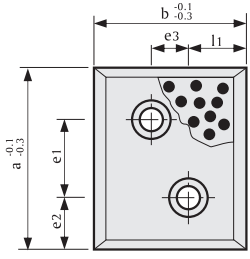

Shape C

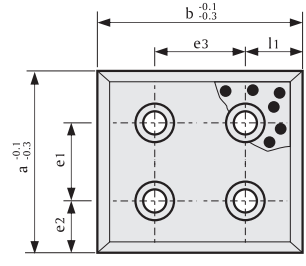

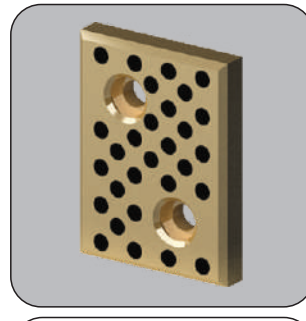

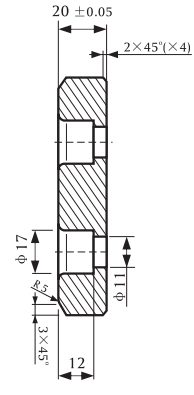



运动方向
Direction of Motion
Embedded non-liquid lubricant
(section)

50082.

FIAT BR	BR1	BR2	BR3	BR4	BR5	BR6
b	38	38	75	75	100	100
a	100	150	100	150	100	150
e1	50	100	50	100	50	100
e2	25	25	25	25	25	25
l1	19	19	25	37.5	25	25
e3	-	-	25	-	50	50
No. Screw holes	1	1	2	1	3	3

订单方式 Ordering Code (example):

Sliding Pads	=50082.
b=38 mm	= 038.
a=100 mm	= 100
Order No	=50082.038.100

材质 Material

高力黄铜
Bronze with Non-Liquid Lubricant.
Oilless lubricating.

注意 Note:

Screws not included

NYC

50083

导板，菲亚特BR标准
Sliding pads, FIAT BR
Bronze with Non-Liquid Lubricant

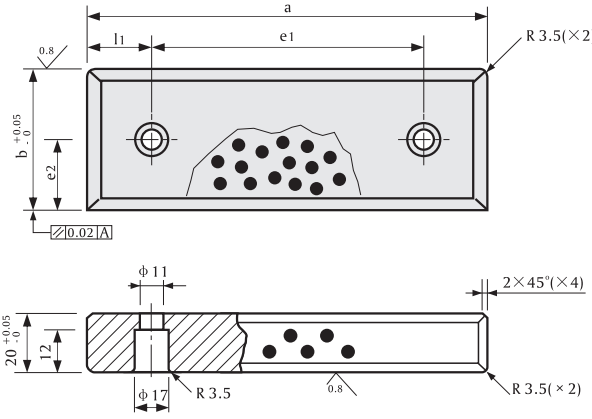

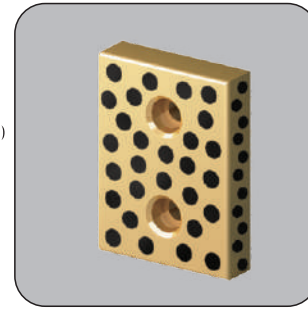

材质 Material

高力黄铜
Bronze with Non-Liquid Lubricant.
Oilless lubricating.

注意 Note:

Screws not included



运动方向
Direction of Motion
Embedded non-liquid lubricant
(section)

50083.

FIAT BR	BR30	BR31	BR32	BR33
b	48	48	75	75
a	100	150	100	150
l1	25	25	25	25
e1	50	100	50	100
e2	24	24	37.5	37.5

订单方式 Ordering Code (example):

Sliding Pads	=50083.
b=48 mm	= 048.
a=100 mm	= 100
Order No	=50083.048.100

NYC

50084

导板，菲亚特BR标准
Sliding pads, FIAT BR
Bronze with Non-Liquid Lubricant

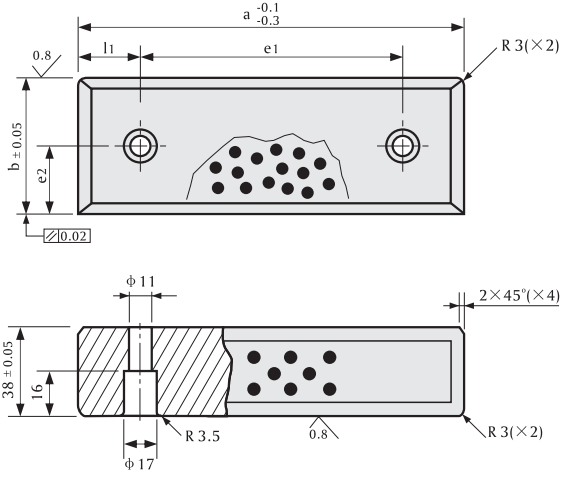

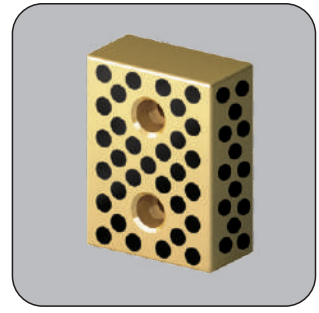

运动方向
Direction of Motion
Embedded non-liquid lubricant
(section)

材质 Material

高力黄铜
Bronze with Non-Liquid Lubricant.
Oilless lubricating.

注意 Note:

Screws not included

50084.

FIAT BR	BR7	BR8
b	75	75
a	100	150
l1	25	25
e1	50	100
e2	37.5	37.5

订单方式 Ordering Code (example):

Sliding Pads	=50084.
b=75 mm	= 075.
a=100 mm	= 100
Order No	=50084.075.100

NYC

50085

导板（注塑模），哈斯高标准
Sliding Pads
Bronze with Non-Liquid Lubricant

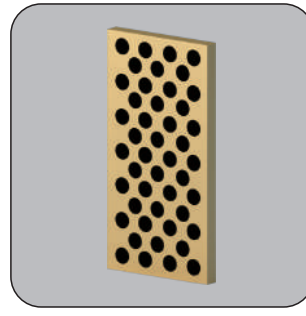

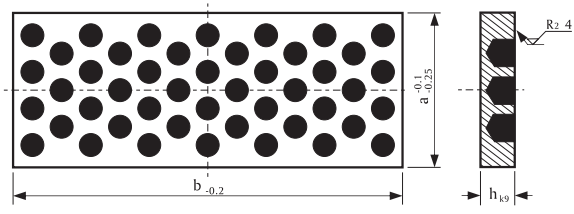

材质 Material

高力黄铜
Bronze with Non-Liquid Lubricant.
Oilless lubricating.

50085.

a	25	25	25	40	40	40	40	40	40	40	40	63	63	63	63
h	5	5	5	5	5	5	5	5	5	6	6	6	6	6	6
b	50	71	90	50	71	90	80	100	125	160	200	80	100	125	160

订单方式 Ordering Code (example):

Sliding Pad	=50085.
a=25 mm	= 025.
b=50mm	= 050
Order No	=50085.025.050

NYC

50086

导板（注塑模），哈斯高标准
Sliding Pads
Bronze with Non-Liquid Lubricant

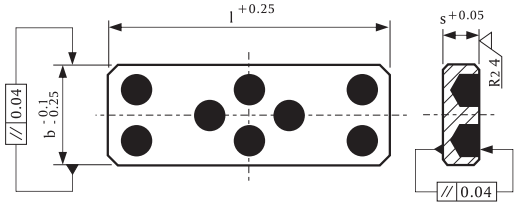



材质 Material

高力黄铜
Bronze with Non-Liquid Lubricant.
Oilless lubricating.



50086.

b	16	18	20	25	28
s	8	8	10	10	10
l	40	50	63	71	80

订单方式 Ordering Code (example):

Sliding Pad	=	50086.
b=16 mm	=	016.
s=8mm	=	008.
l=40mm	=	040
Order No	=	50086.016.008.040

NYC

50087

导板
Sliding Pads
Bronze with Non-Liquid Lubricant

Shape A

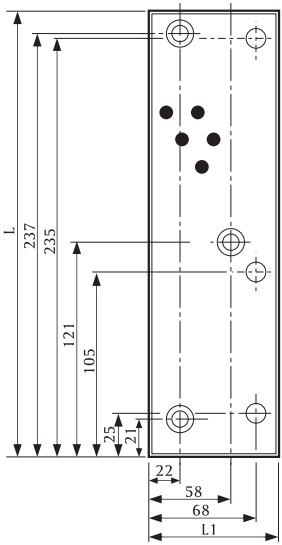

Shape B

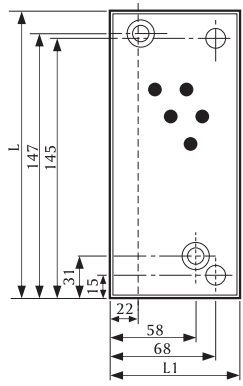

Shape C

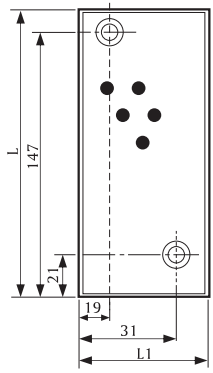

Shape D

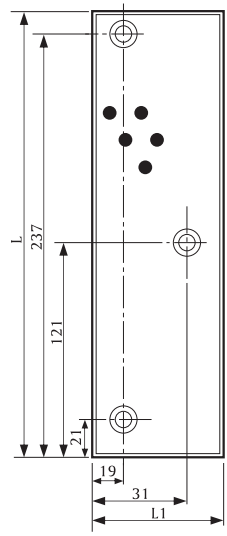

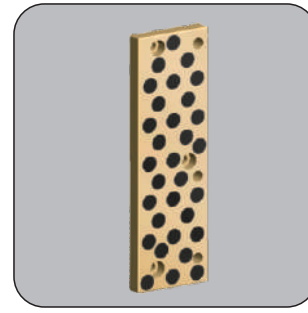

材质 Material

高力黄铜
Bronze with Non-Liquid Lubricant.
Oilless lubricating.



运动方向
Direction of Motion
Embedded non-liquid lubricant
(section)

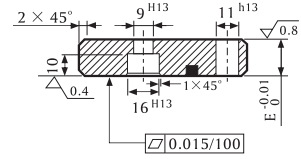

50087

E	16	16	16	16
L	160	250	160	250
L1	80	80	80	80
Shape	A	B	C	D

订单方式 Ordering Code (example):

Guide Post Sets =50087.
Shape = A
Order No =50087. A

NYC

50100

L型导板, 菲亚特BR / 欧宝 34.53标准
FIAT BR/ OPEL 34.53
Angled Guide Gibs
Bronze with Non-Liquid Lubricant

Shape A

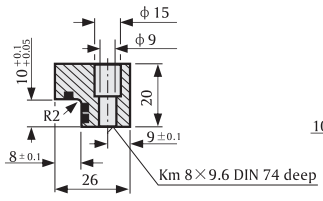

Shape B

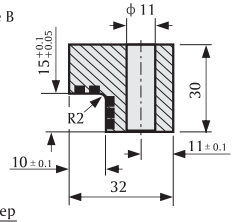

Shape D

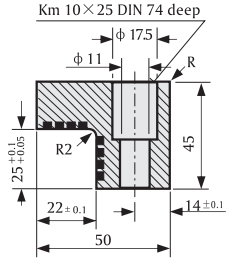

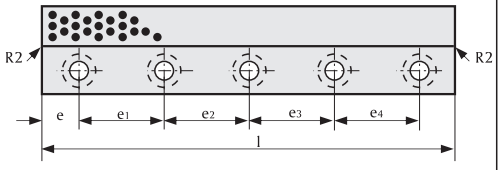

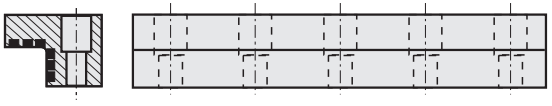

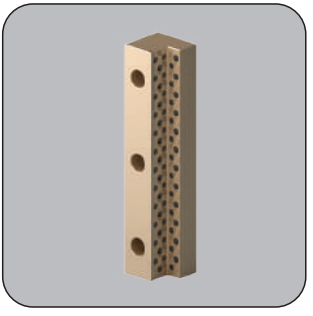

材质 Material

高力黄铜
Bronze with Non-Liquid Lubricant.
Oilless lubricating.

注意 Note:

Screws not included

运动方向
Direction of Motion
Embedded non-liquid lubricant
(section)

50100.

规格代码 Order No	形状 Shape	l $^{0}_{-0.2}$	e ±0.1	e1 ±0.1	e2 ±0.1	e3 ±0.1	e4 ±0.1	Number of Screw holes
50100.026.100	A	100	20	60	-	-	-	2
150		150	20	55	55	-	-	3
200		200	20	55	50	55	-	4
50100.032.100	B	100	20	60	-	-	-	2
150		150	20	55	55	-	-	3
200		200	20	55	50	55	-	4
250		250	20	70	70	70	-	4
50100.050.200	D	200	20	55	50	55	-	4
250		250	20	70	70	70	-	4
300		300	20	65	65	65	65	5
350		350	20	80	75	75	80	5

订单方式
Ordering Code (example):

Angled Guide Gib	=	50100.
Shape B	=	032.
l= 150mm	=	150
Order No	=	50100.032.150

NYC

50101

L型导板
Angled Guide Gibs
Bronze with Non-Liquid Lubricant

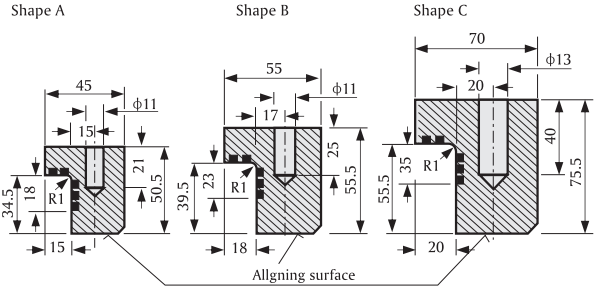

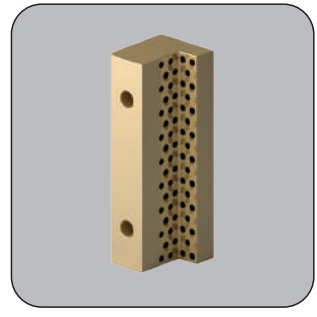

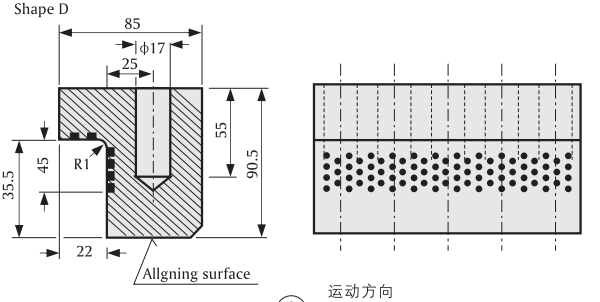

运动方向
Direction of Motion
Embedded non-liquid lubricant (section)

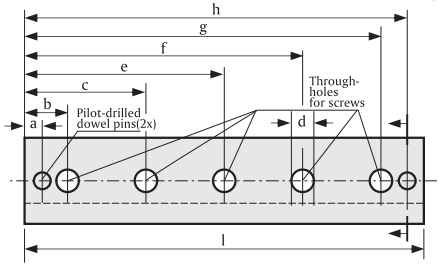

材质 Material
高力黄铜
Bronze with Non-Liquid Lubricant.
Oilless lubricating.

注意 Note:
Screws not included

适配 Fixing:
Use socket cap screws DIN EN ISO 4762
M12x40

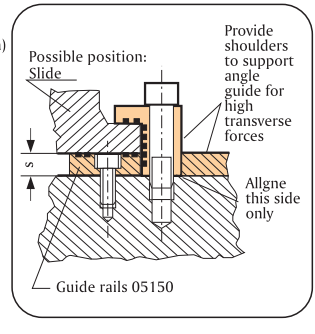

50101.

规格代码 Order No	形状 Shape	l	a	b	c	e	f	g	h	d	Size	Numder	Size	Numder	s
50101.045.100	A	100	10	27.5	-	-	-	72.5	90	13	M12 x 80	2	10 x 60	2	16
160		160			-	-	-	132.5	150						
50101.055.100	B	100			-	-	-	72.5	90						
160		160			-	-	-	132.5	150						
50101.070.160	C	160	12.5	35	-	-	-	125	147.5	17	M16 x 100		12 x 70		20
200		200			-	-	-	165	187.5						
250		250			-	125	-	215	237.5			3			
400		400			125	200	275	365	387.5			5			
50101.085.160	D	160	15	42.5	-	-	-	117.5	145	21	M20 x 120	2	16 x 70		
200		200			-	-	-	157.5	185						
250		250			-	125	-	207.5	235			3			
400		400			125	200	275	357.5	385			5			

订单方式 Ordering Code (example):

Angled Guide Gib	=	50101.
Shape A	=	045.
l = 100mm	=	100
Order No	=	50101.045.100.

NYC

50102

L型导板,奥迪 VW 39D582 / VDI 3357标准
AUDI VW 39D582
Angled Guide Gibs VDI 3357
Bronze with Non-Liquid Lubricant

Shape B

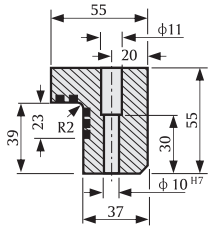

Shape C

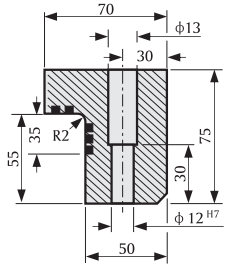

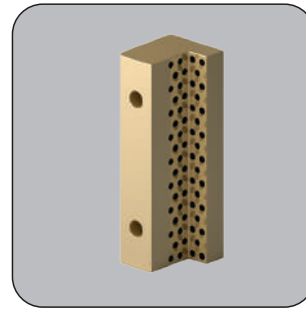

Shape D

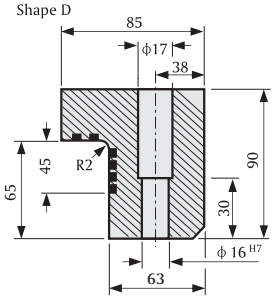

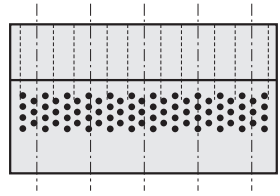

运动方向
Direction of Motion
Embedded non-liquid lubricant (section)

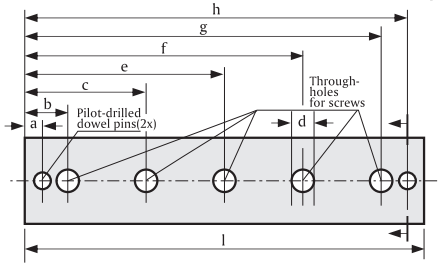

材质 Material

高力黄铜
Bronze with Non-Liquid Lubricant.
Oilless lubricating.

注意 Note:

Screws not included

适配 Fixing:

Use socket cap screws DIN EN ISO 4762
and dowel pins DIN 7979

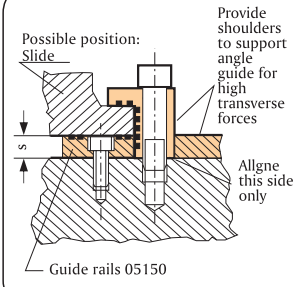

50102.

规格代码 Order No	形状 Shape	l	a	b	c	e	f	g	h	d	Screws Size	Screws Numder	Parallel pins Size	Parallel pins Numder	s
50102.055.100	B	100	10	27.5	-	-	-	72.5	90	13.5	M12 x 80	2	10 x 60	2	16
160		160			-	-	-	132.5	150						
50102.070.160	C	160	12.5	35	-	-	-	125	147.5	17.5	M16 x 100		12 x 70		20
200		200			-	-	-	165	187.5						
250		250			-	125	-	215	237.5			3			
400		400			125	200	275	365	387.5			5			
50102.085.160	D	160	15	42.5	-	-	-	117.5	145	22	M20 x 120	2	16 x 70		
200		200			-	-	-	157.5	185						
250		250			-	125	-	207.5	235			3			
400		400			125	200	275	357.5	385			5			

订单方式 Ordering Code (example):

Angled Guide Gib	=	50102.
Shape B	=	055.
l = 100mm	=	100
Order No	=	50102.055.100.

NYC

50103

L型导板
Angled Guide Gibs
Bronze with Non-Liquid Lubricant

50103.020.012

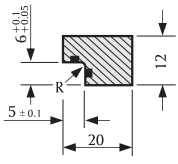

50103.025.015

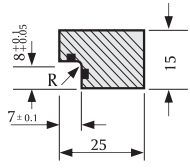

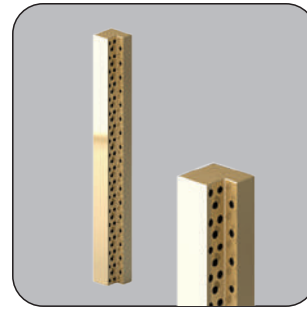

50103.030.020

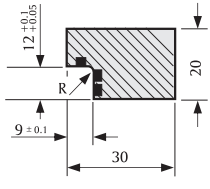

50103.032.030

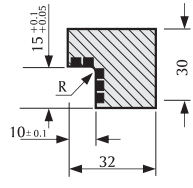

50103.035.035

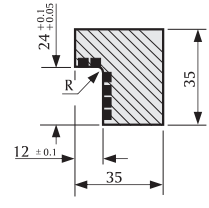

50103.050.045

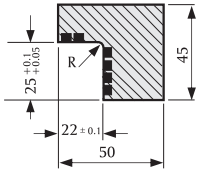

50103.050.050

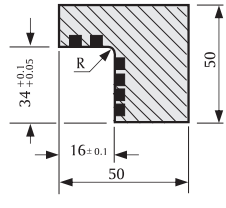

材质 Material

高力黄铜
Bronze with Non-Liquid Lubricant.
Oilless lubricating.



运动方向
Direction of Motion
Embedded non-liquid lubricant
(section)

50103.

规格代码 Order No	Length 305	605	1005
50103.020.012.	●		
025.015.	●		
030.020.	●		
032.030.		●	●
035.035.		●	●
050.045.		●	●
050.050.		●	●

订单方式
Ordering Code (example):

Angled Guide Gib	=50103.	
width=32 mm	=	032.
heigth=30mm	=	030.
length=605mm	=	0605.
Order No	=50103.032.030.0605	

NYC

50104

L 型导板
Angled Guide Gibs
Bronze with Non-Liquid Lubricant

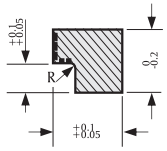

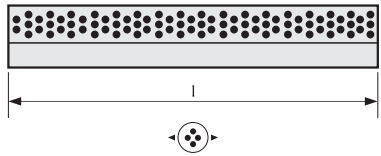

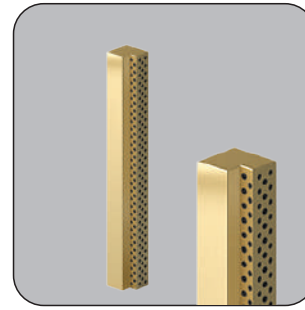

50104.015.012.

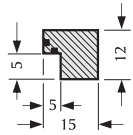

50104.020.017.

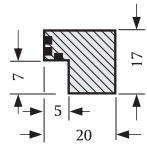

50104.020.022.

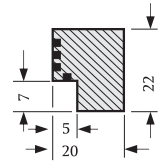

50104.028.027.

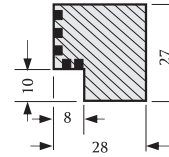

50104.028.036.

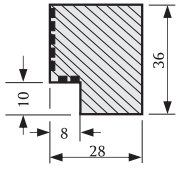

50104.028.046.

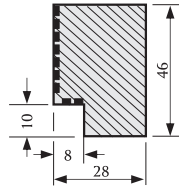

50104.040.066.

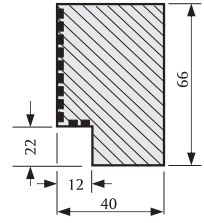

50104.040.086.

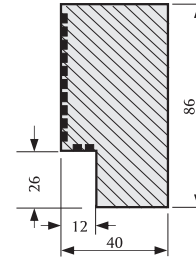

50104.

规格代码 Order No	l 205	320	605
50104.015.012.	●		
020.017.	●	●	
020.022.	●	●	
028.027.	●	●	●
028.036.	●	●	●
028.046.	●	●	●
040.066.	●	●	●
040.086.	●	●	●

材质 Material

高力黄铜
Bronze with Non-Liquid Lubricant.
Oilless lubricating.



运动方向
Direction of Motion
Embedded non-liquid lubricant (section)

订单方式
Ordering Code (example):

Angled Guide Gib	=	50104.040.066.
l = 205mm	=	0205
Order No	=	50104.040.066.0205

NYC

50105

L 型导板
Angled Guide Gibs
Bronze with Non-Liquid Lubricant

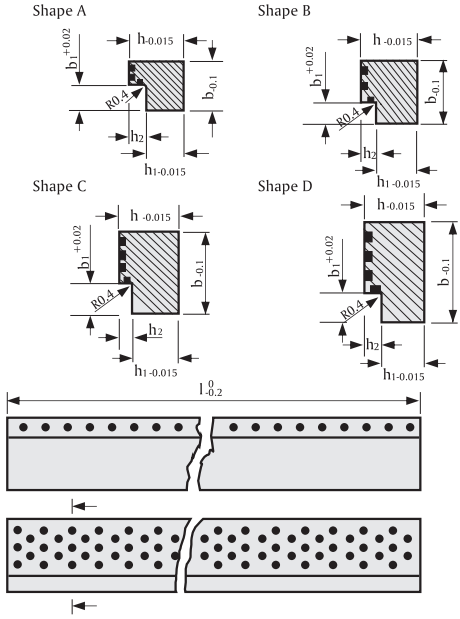

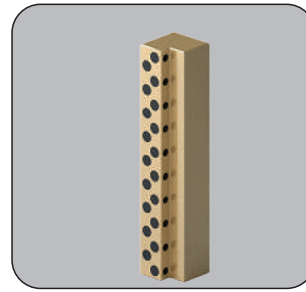

材质 Material

高力黄铜
Bronze with Non-Liquid Lubricant.
Oilless lubricating.

运动方向
Direction of Motion
Embedded non-liquid lubricant
(section)

50105.

规格代码 Order No	形状 Shape	h	b	l	h_1	h_2	b_1
50105.016.115.040	A	16	11,5	40	12	4	6
050	A			50			
063	A			63			
080	A			80			
50105.016.155.050	A	16	15,5	50	11	5	8
063	A			63			
080	A			80			
100	A			100			
50105.020.195.063	B	20	19,5	63	15	5	8
080	B			80			
100	B			100			
125	B			125			
50105.020.245.080	B	20	24,5	80	15	5	8
100	B			100			
125	B			125			
160	B			160			
50105.025.315.100	C	25	31,5	100	19	6	10
125	C			125			
160	C			160			
200	C			200			
50105.025.395.125	D	25	39,5	125	19	6	10
160	D			160			
200	D			200			
250	D			250			
50105.032.495.160	D	32	49,5	160	24	8	12
200	D			200			
250	D			250			
315	D			315			

订单方式
Ordering Code (example):

Angled Guide Gib	=	50105.
h = 16mm	=	016.
b = 11.5mm	=	115.
l = 40mm	=	040
Order No	=	50105.016.115.040

NYC

50106
50107

T 型导轨
T-Guide Bars
Bronze with Non-Liquid Lubricant

50106

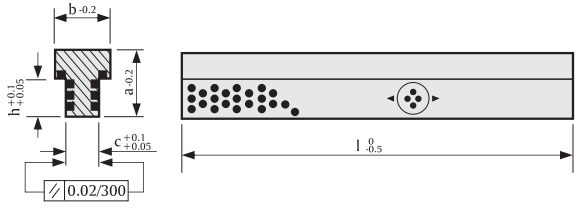

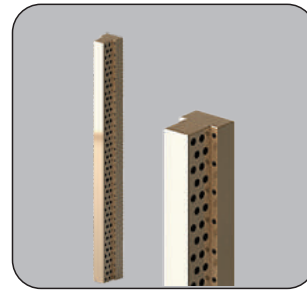

50106.

规格代码 Order No	a	b	c	h	l
50106.012.018.0350	12	18	8	5	350
025.022.0350	25	22	12	15	350
035.028.0350	35	28	18	20	350

订单方式 Ordering Code (example):

T-Guide Bar =	50106.
a = 12mm =	012.
b = 18mm =	018.
l = 350mm =	350
Order No =	50106.012.018.350

材质 Material

高力黄铜
Bronze with Non-Liquid Lubricant.
Oilless lubricating.

运动方向
Direction of Motion
Embedded non-liquid lubricant
(section)

50107

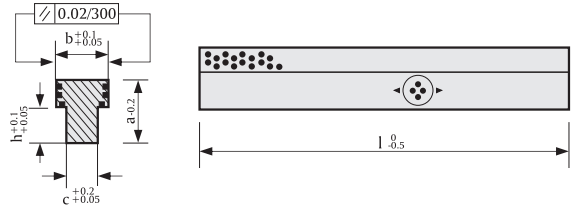

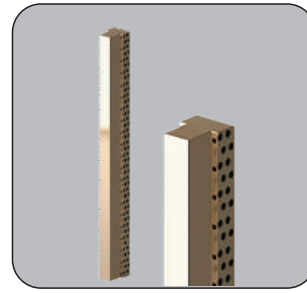

50107

规格代码 Order No	a	b	c	h	l
50107.012.018.0350	12	18	8	5	350
025.022.0350	25	22	12	15	350
035.028.0350	35	28	18	20	350

订单方式 Ordering Code (example):

T-Guide Bar =	50107.
a = 12mm =	012.
b = 18mm =	018.
l = 350mm =	350
Order No =	50107.012.018.350

材质 Material

高力黄铜
Bronze with Non-Liquid Lubricant.
Oilless lubricating.

运动方向
Direction of Motion
Embedded non-liquid lubricant
(section)

NYC

50108
50109

V 型导板，纳姆斯 / 福特标准
NAAMS G21-G22-G23/ FORD WDX 760
Sliding Blocks to NAAMS
Bronze with Non-Liquid Lubricant
Prismatic Guides, Steel

50108

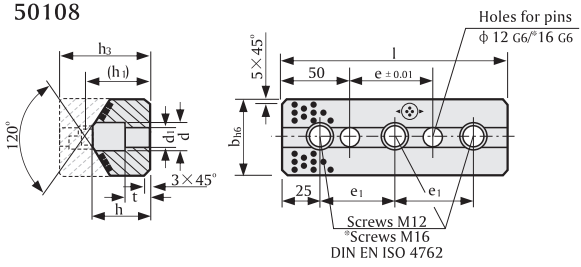

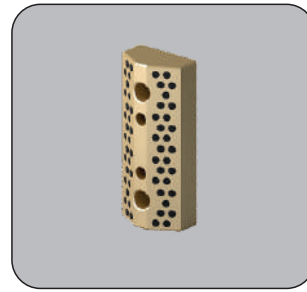

50108.

规格代码 Order No	b	h	(h1)	h3	l	e	e1	d	d1	t	Number of Screw holes
50108.065.039. 0150	65	39	(42)	65	150	50	100	20	13.5	13	2
0200					200	100	150				2
0250					250	150	100				3
0300					300	200	125				3
50108.075.039. 0150	75	39	(42)	65	150	50	100	20	13.5	13	2
0200					200	100	150				2
0250					250	150	100				3
0300					300	200	125				3
50108.125.052 0150°	125	52	(57)	85	150	50	100	26	17.5	15	2
0200°					200	100	150				2
0250°					250	150	100				3
0300°					300	200	125				3

材质 Material

高力黄铜
Bronze with Non-Liquid Lubricant.
Oilless lubricating.

Execution:

Sliding faces ground

注意 Note:

Screws and pins not included

订单方式 Ordering Code (example):

Sliding Block	=50108.	
b =65mm	=	065.
h =39mm	=	039.
l =200mm	=	0200.
Order No	=50108.065.039.0200	

50109

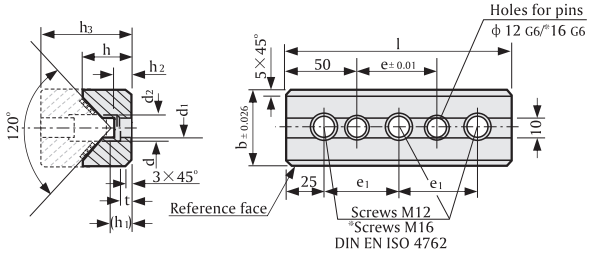



50109.

规格代码 Order No	b	h	(h1)	h2	h3	l	e	e1	d	d1	d2	t	Number of Screw holes
50109.065.040. 0150	65	40	(23)	21	65	150	50	100	20	13.5	14	10	2
0200						200	100	150					2
0250						250	150	100					3
0300						300	200	125					3
50109.075.040. 0150	75	40	(23)	21	65	150	50	100	20	13.5	14	10	2
0200						200	100	150					2
0250						250	150	100					3
0300						300	200	125					3
50109.125.060. 0150°	125	60	(28)	27	85	150	50	100	26	17.5	18	15	2
0200°						200	100	150					2
0250°						250	150	100					3
0300°						300	200	125					3

材质 Material

钢，表面热处理
Steel
Sliding faces surface hardened

注意 Note:

Screws and pins not included

订单方式 Ordering Code (example):

Prismatic Guide	=50109.	
b =65mm	=	065.
h =40mm	=	040.
l =200mm	=	0200
Order No	=50109.065.040.0200	

NYC

50110
50111

V 型导板, 奥迪39D893 / VDI 3357标准
Sliding Blocks, AUDI 39D893, VDI 3357
Bronze with Non-Liquid Lubricant
Prismastic Guides, Steel

50110

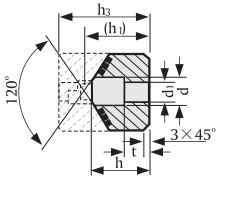

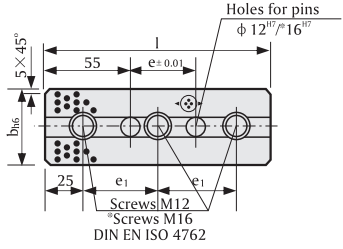

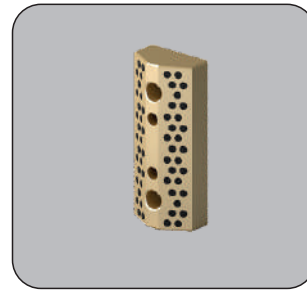

50110.

规格代码 Order No	b	h	(h1)	h3	l	e	e1	d	d1	t	Number of Screw holes
50110.065.044.0150	65	44	(47)	65	150	45	100	20	13.5	20	2
0200					200	95	150				2
0250					250	145	100				3
0300					300	195	125				3
50110.125.047.0150	125	52	(57)	85	150	45	100	26	17.5	15	2
0200					200	95	150				2
0250					250	145	100				3
0300					300	195	125				3

材质 Material

高力黄铜
Bronze with Non-Liquid Lubricant.
Oilless lubricating.

Execution:

Sliding faces ground

注意 Note:

Screws and pins not included

订单方式
Ordering Code (example):

Sliding Block	=50110.	
b =65mm	=	065.
h =44mm	=	044.
l =200mm	=	0200.
Order No	=50110.065.044.0200	

50111

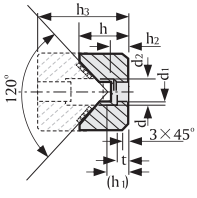

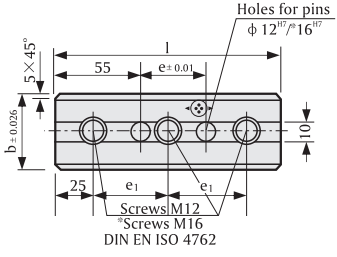



50111.

规格代码 Order No	b	h	(h1)	h2	h3	l	e	e1	d	d1	d2	t	Number of Screw holes
50111.065.035. 0150	65	35	(18)	17	65	150	45	100	20	13.5	14	8	2
0200						200	95	150					2
0250						250	145	100					3
0300						300	195	125					3
50111.125.060. 0150*	125	60	(33)	32	85	150	45	100	26	17.5	18	15	2
0200*						200	95	150					2
0250*						250	145	100					3
0300*						300	195	125					3

材质 Material

钢, 表面热处理
Steel
Sliding faces surface hardened

注意 Note:

Screws and pins not included

订单方式
Ordering Code (example):

Prismastic Guide	=50111.	
b =65mm	=	065.
h =35mm	=	035.
l =200mm	=	0200.
Order No	=50111.065.035.0200	

NYC

50112
50113

V 型导板, 欧宝 U34.55 / 欧宝 U34.56标准
OPEL U34.55/ OPEL U34.56
Prismatic Guides
Bronze with Non-Liquid Lubricant
Sliding Blocks, Steel

50112

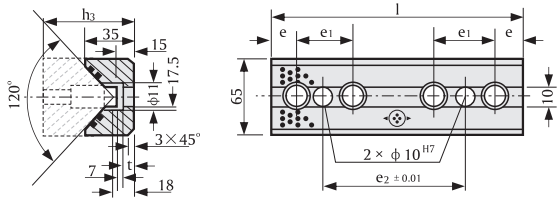

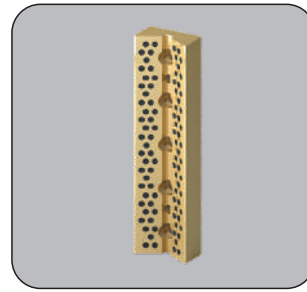

50112.

规格代码 Order No		e	e1	e2	h3	l	Number of Screw holes
50112.065.35.	0100	20	60	20	65	100	2
	0150	25	50	50		150	3
	0200			100		200	4
	0250			150		250	5
	0300			200		300	6

订单方式 Ordering Code (example):

Prismatic Guide	=50112.
width =65mm	= 065.
thickness =35mm	= 035.
l =250mm	= 0250.
Order No	=50112.065.035.0250

材质 Material

高力黄铜
Bronze with Non-Liquid Lubricant.
Oilless lubricating.

注意 Note:

Screws and pins not included.

运动方向
Direction of Motion
Embedded non-liquid lubricant
(section)

50113

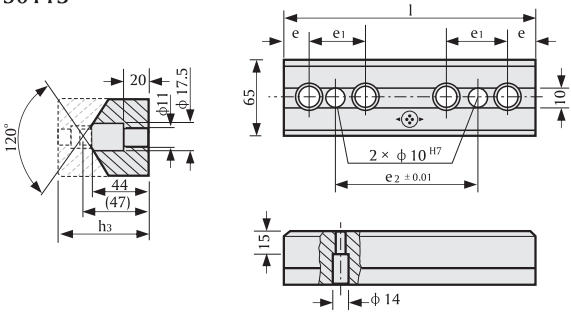

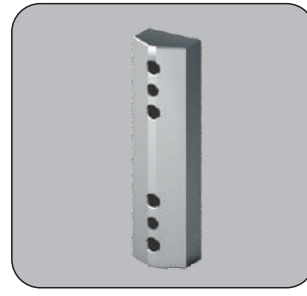

50113.

规格代码 Order No	e	e1	e2	h3	l	Number of Screw holes
50113.065.044.0100	20	60	20	65	100	2
0150	25	50	50		150	3
0200			100		200	4
0250			150		250	5
0300			200		300	6

材质 Material

钢，表面热处理
Steel
Sliding faces surface hardened

注意 Note:

Screws and pins not included

订单方式
Ordering Code (example):

Sliding block	=50113.
width =65mm	= 065.
thickness =35mm	= 044.
l =300mm	= 0300
Order No	=50113.065.044.0300

NYC

50114
50115

V型导板, 奥迪1D493标准
Prismatic Guides, AUDI 1D493
Bronze with Non-Liquid Lubricant
Sliding Blocks, Steel

50114

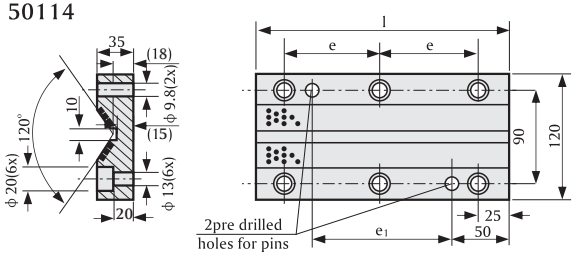

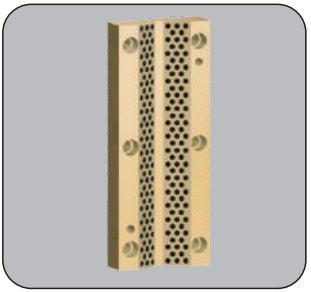

50114.

规格代码 Order No	l	e	e1	Number of Screw holes
50114.120.035. 0150	150	50	50	6
0200	200	75	100	6
0250	250	100	150	6
0300	300	125	200	8

订单方式 Ordering Code (example):

Prismatic Guide	=50114.
width =120mm	= 120.
thickness =35mm	= 035.
l =150mm	= 0150.
Order No	=50114.120.035.0150

材质 Material

高力黄铜
Bronze with Non-Liquid Lubricant.
Oilless lubricating.

注意 Note:

Screws and pins not included

运动方向
Direction of Motion
Embedded non-liquid lubricant
(section)

50115

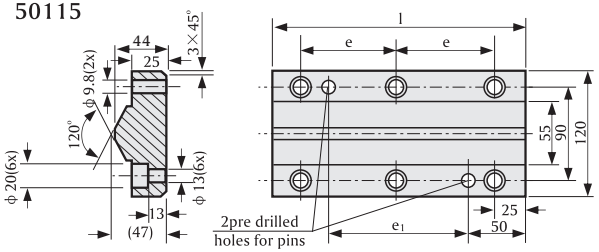



50115.

规格代码 Order No	l	e	e1	Number of Screw holes
50115.120.044. 0150	150	50	50	6
0200	200	75	100	6
0250	250	100	150	6
0300	300	125	200	8

材质 Material

钢, 表面热处理
Steel
Sliding faces surface hardened

注意 Note:

Screws and pins not included

订单方式 Ordering Code (example):

Sliding Block	=50115.
width =120mm	= 120.
thickness =44mm	= 044.
l =150mm	= 0150
Order No	=50115.120.044.0150

NYC

50116

V型导板
Prismatic Guides Steel

Shape A

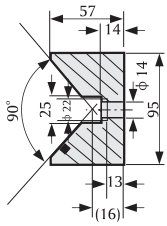

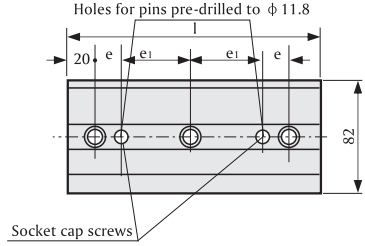

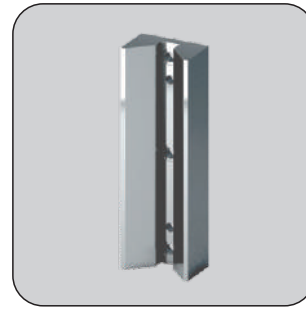

Shape B

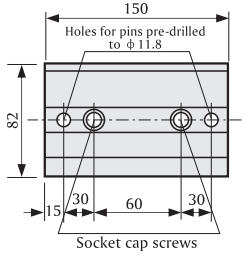

Shape C

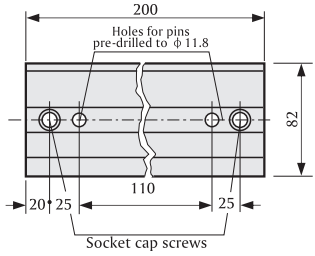

50116.

规格代码 Order No		形状 Shape	l	e	e1	Number of Screw holes
50116.095.057.	0150	B	150	30	-	2
	0200	C	200	25	-	2
	0250	A	250	25	80	3
	0300	A	300	30	100	3

材质 Material

钢, 表面热处理
Steel
Sliding faces surface hardened

注意 Note:

Screws and pins not included

适配 Fixing:

Use socket cap screws M12
DIN EN ISO 4762

订单方式
Ordering Code (example):

Prismatic Guide	=50116.
width =95mm	= 095.
thickness =57mm	= 057.
l =250mm	= 0250.
Order No	=50116.095.057.0250

NYC

50117

V型导板
Sliding Blocks
Bronze with Non-Liquid Lubricant

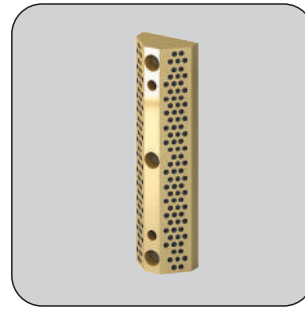

Shape A

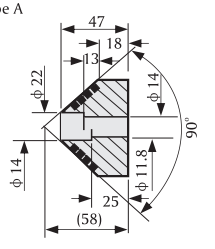

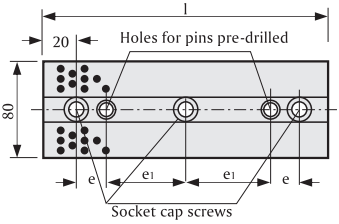

Shape B

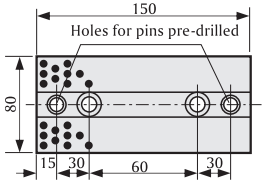

Shape C

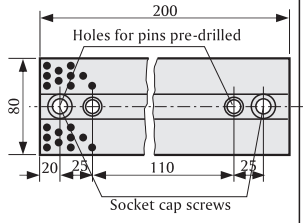

材质 Material

高力黄铜
Bronze with Non-Liquid Lubricant.
Oilless lubricating.

注意 Note:

Screws and pins not included

适配 Fixing:

Use socket cap screws M12
DIN EN ISO 4762



运动方向
Direction of Motion
Embedded non-liquid lubricant
(section)

50117.

规格代码 Order No	形状 Shape	l	e	e1	Number of Screw holes
50117.080.047.0150	B	150	30	-	2
0200	C	200	25	-	2
0250	A	250	25	80	3
0300	A	300	30	100	3

订单方式
Ordering Code (example):

Sliding Block	=50117.
width =80mm	= 080.
thickness =47mm	= 047.
l =250mm	= 0250.
Order No	=50117.080.047.0250

NYC

50700
50701

V型导板, 日本标准
Prismatic Guides, JIS
Bronze with Non-Liquid Lubricant
Sliding Blocks, Steel

50700

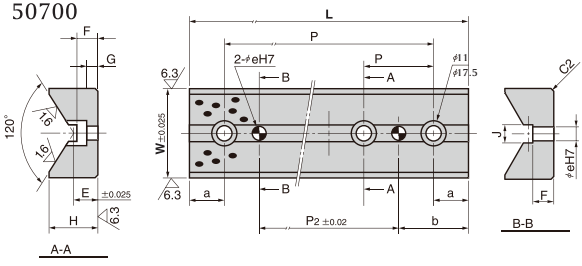

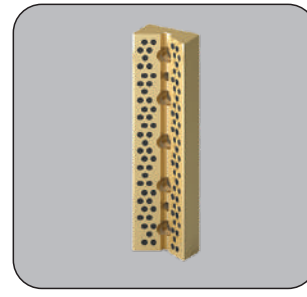

50700.

H	a	b	P	P1	螺栓	e	P2	E	F	G	J	h	W	L
	15	30	45	—	2		15							75
31	20	40	60				20					50	50	100
	25	50	75				25		15					125
			100				50							150
	20	40	60			10	20	18		8	13			100
					3		50							150
35	25	50	—	50	4		100					65	65	200
					5		150							250
					6		200							300

材质 Material

高力黄铜
Bronze with Non-Liquid Lubricant.
Oilless lubricating.

注意 Note:

Screws and pins not included

订单方式
Ordering Code (example):

Sliding Block	= 50700.
width = 50 mm	= 050.
l =150mm	= 150
Order No	=50700.050.150

50701

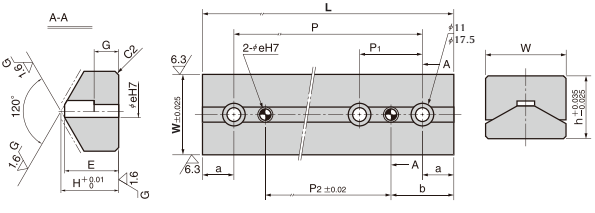

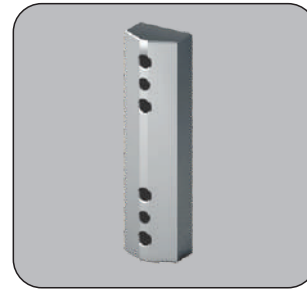

50701.

H	a	b	P	P1	螺栓	e	P2	E	G	h	W	L
	15	30	45	—	2		15					75
32	20	40	60				20	29	10	50	50	100
	25	50	75				25					125
			100				50					150
	20	40	60			10	20					100
					3		50					150
47	25	50	—	50	4		100	44	20	65	65	200
					5		150					250
					6		200					300

材质 Material

钢, 表面热处理
Steel
Sliding faces surface hardened

注意 Note:

Screws and pins not included

订单方式
Ordering Code (example):

Sliding Block	= 50701.
width = 65 mm	= 065.
l =200mm	= 200
Order No	=50701.065.200

NYC

50702

V型导板组合
V driver GroupReturn Clamp

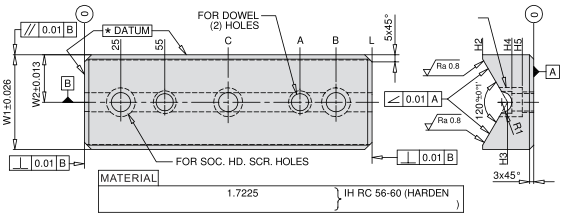

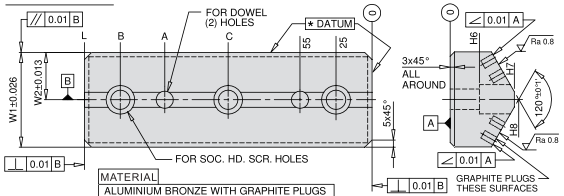

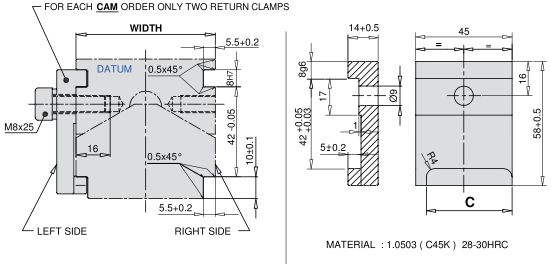

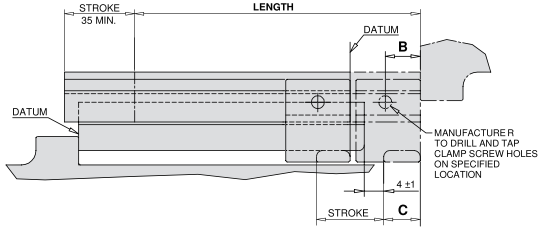



Note:

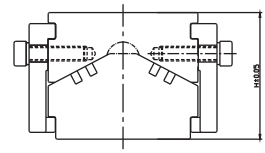

50702.

NUMBER FOR ONE SET ☒	W1	W2	H1	L	A	B	C	H2	H3	H4	H5	H6	H7	H8	R1	SCREW SIZE	DOWEL SIZE
50702-150	65	32.5	65	150	100	125	---	35	18	15	8	20	44	47	7	M12	Ø12
50702-200				200	150	175	---										
50702-250				250	200	225	125										
50702-300				300	250	275	150										

订单方式
Ordering Code (example):

50702-150-2 -B26C24

- LENGTH OF CLAMP ENGAGEMENT; THREAD LOCATION IN V-DRIVER:
  - C = 24mm, B = 26mm } ACCORDING TO DESIGN
- LOCATION OF RETURN CLAMP:
  - 1 = RIGHT SIDE,
  - 2 = LEFT SIDE,
  - 3 = BOTH SIDES
- LENGTH

NYC

50118

单棱面导板
Single-sided Prismatic Guides
Bronze with Non-Liquid Lubricant



Shape A

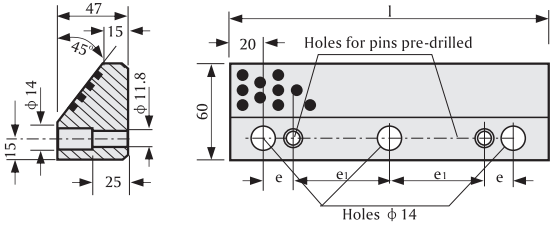

Shape B

Shape C

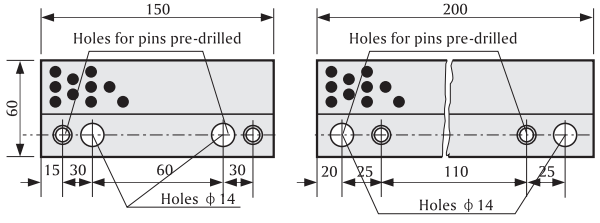

材质 Material

高力黄铜
Bronze with Non-Liquid Lubricant.
Oilless lubricating.

注意 Note:

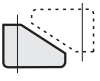

Slingle-sided prismatic sliding blocks 50119.
See opposite page

Screws and pins not included



运动方向
Direction of Motion
Embedded non-liquid lubricant (section)

50118.

规格代码 Order No	形状 Shape	l	e	e1	Number of Screw holes
50118.060.047. 0150	B	150	30	-	2
0200	C	200	25	-	2
0250	A	250	25	80	3
0300	A	300	30	100	3

订单方式
Ordering Code (example):

Single-sided	=50118.
width =60mm	= 060.
thickness =47mm	= 047.
l =250mm	= 0250.
Order No	=50118.060.047.0250

NYC

50119

单棱面导板
Single-sided Prismatic Sliding Blocks
Steel



Shape A

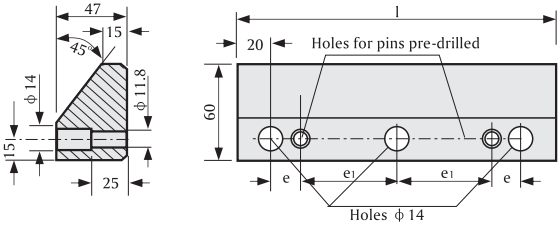

Shape B

Shape C

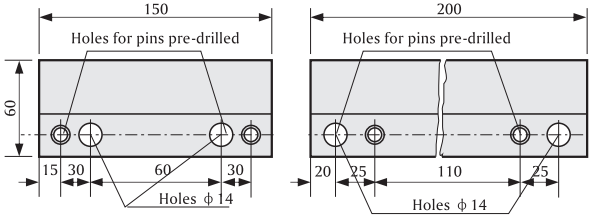

材质 Material

钢, 表面热处理
Steel
Sliding faces surface hardened

注意 Note:

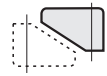

Slingle-sided prismatic sliding blocks 50118. See opposite page

Screws and pins not included

50119.

规格代码 Order No		形状 Shape	l	e	e1	Number of Screw holes
50119.060.047.	0150	B	150	30	-	2
	0200	C	200	25	-	2
	0250	A	250	25	80	3
	0300	A	300	30	100	3

订单方式
Ordering Code (example):

Slingle-sided	=50119.	
width =60mm	=	060.
thickness =47mm	=	047.
l =250mm	=	0250.
Order No	=50119.060.047.0250	

NYC

50120

单棱面导板
Single-sided Prismatic Guides
Bronze with Non-Liquid Lubricant



Shape A

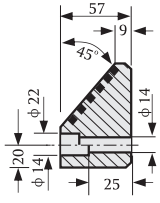

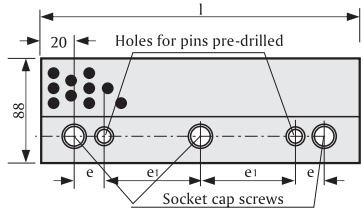

Shape B

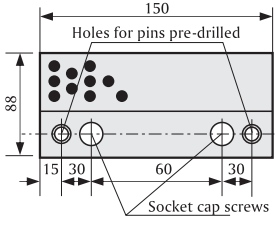

Shape C

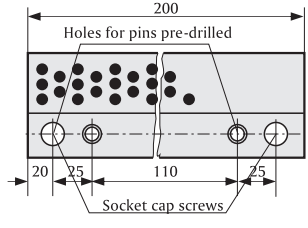

材质 Material

高力黄铜
Bronze with Non-Liquid Lubricant.
Oilless lubricating.

注意 Note:

Screws and pins not included

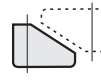

Slingle-sided prismatic sliding blocks 50121. See opposite page

适配 Fixing:

Use socket cap screws M12
DIN EN ISO 4762

50120.

规格代码 Order No	形状 Shape	l	e	e1	Number of Screw holes
50120.088.057. 0150	B	150	30	-	2
0200	C	200	25	-	2
0250	A	250	25	80	3
0300	A	300	30	100	3

订单方式
Ordering Code (example):

Single-sided	=50120.
width =88mm	= 088.
thickness =57mm	= 057.
l =250mm	= 0250.
Order No	=50120.088.057.0250

50121

单棱面导板
Single-sided Prismatic Sliding Blocks
Steel



Shape A

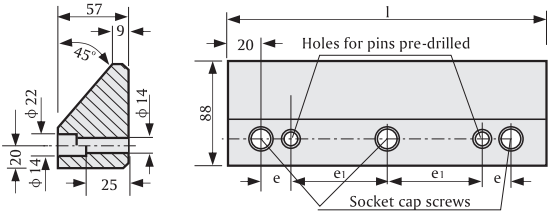

Shape B

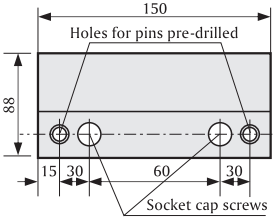

Shape C

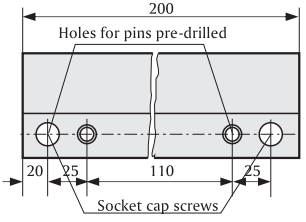

材质 Material

钢, 表面热处理
Steel
Sliding faces surface hardened

注意 Note:

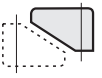

Slingle-sided prismatic sliding blocks 50120.
See opposite page

Screws and pins not included

适配 Fixing:

Use socket cap screws M12
DIN EN ISO 4762

50121.

规格代码 Order No	形状 Shape	l	e	e1	Number of Screw holes
50121.088.057. 0150	B	150	30	-	2
0200	C	200	25	-	2
0250	A	250	25	80	3
0300	A	300	30	100	3

订单方式
Ordering Code (example):

Single-sided	=50121.
width =88mm	= 088.
thickness =57mm	= 057.
l =250mm	= 0250.
Order No	=50121.088.057.0250

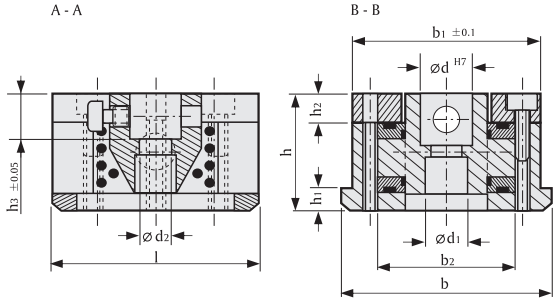

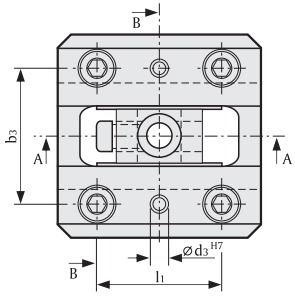

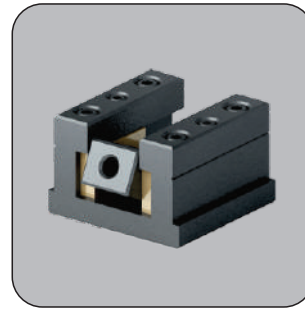

Application Example:

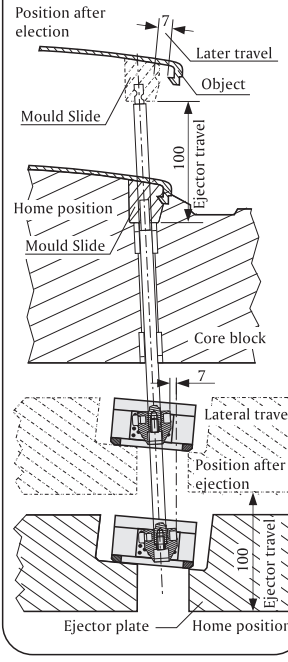

Mounting example:

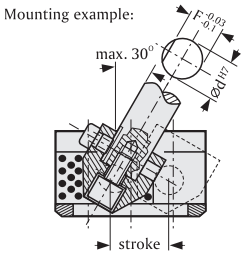

订单方式
Ordering Code (example):

Bolt guide	=50122.
ød=8mm	= 08.
Stroke=10 mm	= 010
Order No	=50122.08.010

50122.

规格代码 Order No	ød	Stroke	b	l	h	b1	b2	b3	l1	h1	h2	h3	ød1	ød2	ød3	F
50122.08.010	8	10	33	32	22	30	19	24	20	5	7	8	8	4.5	3	7
10.018	10	18	45	45	27	40	25	32	30		8	10	10	5.5	4	9
12.020	12	20	57	50	32	51	31	39	35	7	10	12	11	7	6	11
16.025	16	25	65	65	36	58	38	46	40	8		16	14	9		14.5
20.030	20	30	80	80	42	72	44	56	55	11	12	20	17	11	8	18
25.035	25	35	93	90	50	85	52	66	65	15	15	25	20	14	10	22.5
30.040	30	40	101	100	55	93	60	74	70			30				27
35.045	35	45	120	120	62	110	70	85	80		18	35				32
40.050	40	50	130	135	70	120	80	95	90			40	26	17.5		36
45.055	45	55	140	150	80	130	90	105	110		20	45				40

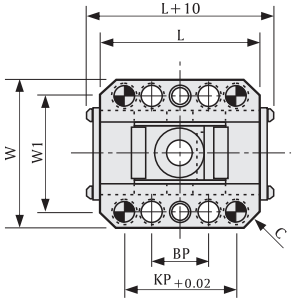

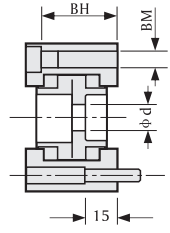



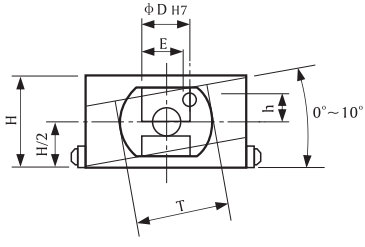

50123.

d (Pin Diameter)	16	20	25	30
W	64	76	81	88
L	70	75	85	100
H	40	46	48	54
W1	50	60	65	72
HP	25	30	40	50
b (accessory)	m6 × 45	m8 × 55	m8 × 55	m8 × 60
KP	50	55	65	80
k	ϕ6 × 25	ϕ8 × 30	ϕ8 × 30	ϕ8 × 30
BM	m8	m10	m10	m10
E	13	17	22	27
h	10	13	14	15
c	6	8	8	8
t	45	45	50	60
d	9	11	14	14

订单方式 Ordering Code (example):

Bolt Guide=50123.
d =16mm = 016
Order No =50123.016

NYC

50125

L型导板
Angled Guide Gibs
Bronze with Non-Liquid Lubricant

Shape A

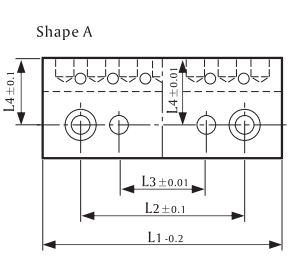

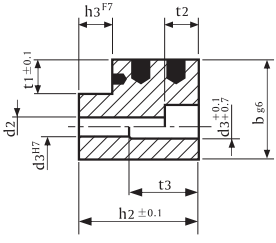



Shape B

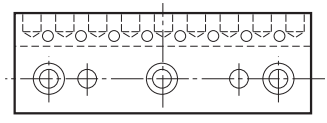

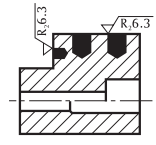

运动方向
Direction of Motion
Embedded non-liquid lubricant
(section)

材质 Material

高力黄铜
Bronze with Non-Liquid Lubricant.
Oilless lubricating.

注意 Note:

Screws not included

50125.

b	16	16	16	20	20	20	25	25	25	30	30	30
t_3	-	-	-	9.5	9.5	9.5	19	19	19	34	34	34
t_2	5.7	5.7	5.7	6.8	6.8	6.8	9	9	9	11	11	11
t_1	5	5	5	5	5	5	6	6	6	7	7	7
d_3	5	5	5	6	6	6	8	8	8	10	10	10
d_2	5.5	5.5	5.5	6.6	6.6	6.6	9	9	9	11	11	11
d_1	10	10	10	11	11	11	15	15	15	18	18	18
l_4	9.5	9.5	9.5	12	12	12	15.5	15.5	15.5	18	18	18
l_3	14	35	54	40	60	85	50	75	110	55	90	130
l_2	34	55	74	64	84	109	80	105	140	95	130	170
h_3	4	4	4	5	5	5	6	6	6	8	8	8
h_2	11	11	11	19	19	19	31	31	31	49	49	49
h_1	12	12	12	20	20	20	32	32	32	50	50	50
l_1	50	71	90	80	100	125	100	125	160	125	160	200
Shape	A	A	B	A	A	B	A	A	B	A	A	B

订单方式 Ordering Code (example):

Angled Guide Gib =50125.		
b =16mm	=	016.
h1=12mm	=	012.
l1 =50mm	=	050
Order No	=50125.016.012.050	
h1为订单编号用		

NYC

50130

强制拉回
Cam Forced Return Blocks

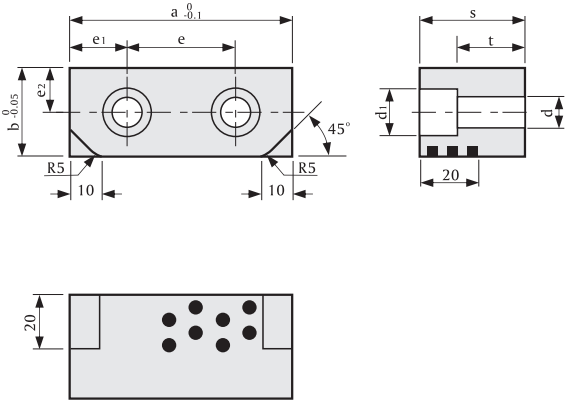

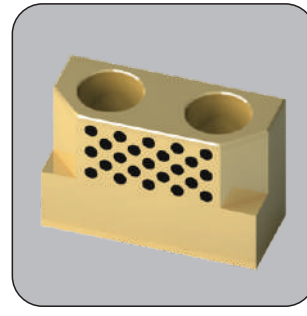

材质 Material

高力黄铜
Bronze with Non-Liquid Lubricant.
Oilless lubricating.

50130.

b	a	s	e_1	e	e_2	d	d_1	t
25	60	30	15	30	11	11	17.5	18
32	80	38	20	40	16	13	20	23

订单方式 Ordering Code (example):

Sliding Block=50130.
d=25 mm = 025.
a=60mm = 060
Order No =50130.025.060

Shape A

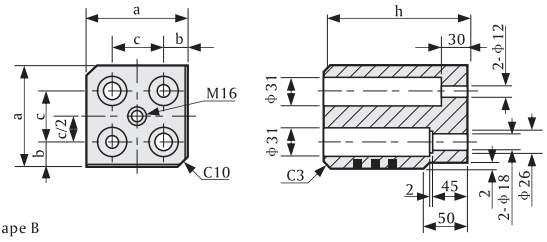

Shape B

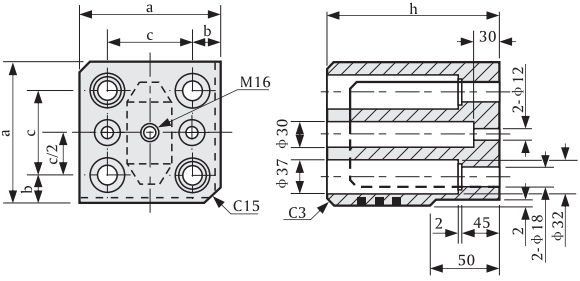

运动方向
Direction of Motion
Embedded non-liquid lubricant
(section)

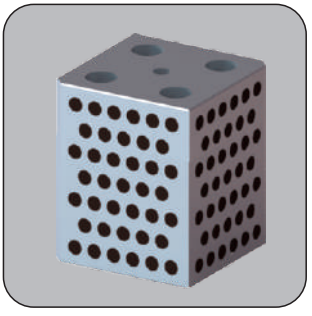

材质 Material

铸铁
Iron with Non-Liquid Lubricant.
Oilless lubricating.

Mounting Examples:

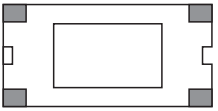

50131.

a	100	140	160
b	25	30	30
c	50	80	100
h	150	180	200
Shape	A	B	B

订单方式 Ordering Code (example):

Guide bush =50131.
a=100 mm = 100
Order No =50131.100

NYC

50150

长型导板
Flat Guide Bars
Bronze with Non-Liquid Lubricant

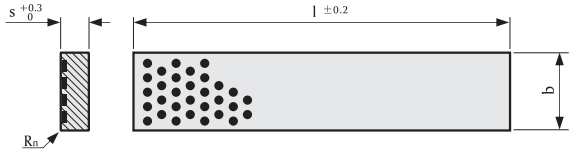

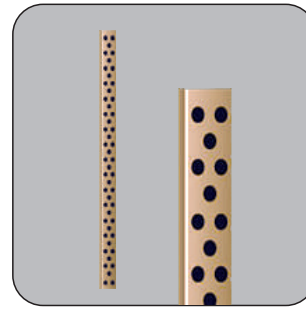

材质 Material

高力黄铜
Bronze with Non-Liquid Lubricant.
Oilless lubricating.

Execution:

Sliding faces ground.



运动方向
Direction of Motion
Embedded non-liquid lubricant
(section)

50150

规格代码 Order No	b	s	Rn	l 305	l 605	l 1005
50150.020.004.	20	4	1	●		
030.004.	30	4	1	●		
025.005.	25	5	1	●		
040.005.	40	5	1	●	●	
030.006.	30	6	1	●	●	
040.006.	40	6	1	●	●	
030.008.	30	8	2	●	●	
040.008.	40	8	2	●	●	●
030.010.	30	10	2	●	●	●
035.010.	35	10	2	●	●	●
040.010.	40	10	2	●	●	●
050.010.	50	10	2	●	●	●
080.010.	80	10	2	●	●	●
030.012.	30	12	2	●	●	●
040.012.	40	12	2		●	●
050.012.	50	12	2		●	●
060.012.	60	12	2		●	●
080.012.	80	12	2		●	●
040.016.	40	16	2		●	●
060.016.	60	16	2		●	●
080.016.	80	16	2		●	●
100.016.	100	16	2		●	●
050.020.	50	20	2		●	●
080.020.	80	20	2		●	●
100.020.	100	20	2		●	●
125.020.	125	20	2		●	●
080.025.	80	25	2		●	●
100.025.	100	25	2		●	●
125.025.	125	25	2		●	●
160.025.	160	25	2		●	●

订单方式
Ordering Code (example):

Flat Guide Bar	=	50150.
b=50 mm	=	050.
s=10 mm	=	010.
l=605 mm	=	0605
Order No	=	50150.050.010.0605

NYC

50151

长型导板
Flat Guide Bars
Bronze with Non-Liquid Lubricant

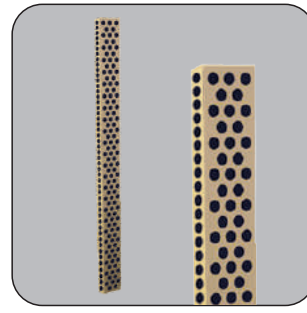

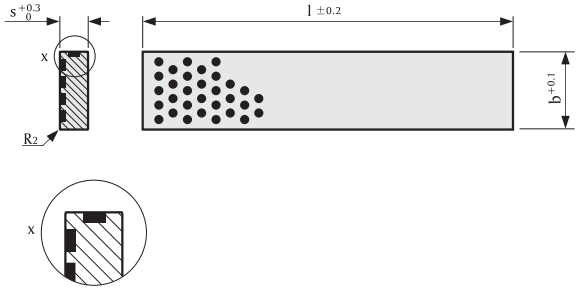

材质 Material

高力黄铜
Bronze with Non-Liquid Lubricant.
Oilless lubricating.

Execution:

Sliding faces ground.

运动方向
Direction of Motion
Embedded non-liquid lubricant
(section)

50151.

规格代码 Order No	b	s	l 305	l 605
50151.025.005.0305	25	5	●	
030.006.0305	30	6	●	
040.008.0605	40	8		●
035.010.0605	35	10		●
050.010.0605	50	10		●
040.012.0605	40	12		●
080.012.0605	80	12		●
060.016.0605	60	16		●
080.020.0605	80	20		●
100.020.0605	100	20		●

订单方式
Ordering Code (example):

Flat Guide Bar	=	50151.
b=50 mm	=	050.
s=10 mm	=	010.
l=605 mm	=	0605
Order No	=	50151.050.010.0605

NYC

50152

导板
Flat Guide Bars
Bronze with Non-Liquid Lubricant

Shape A

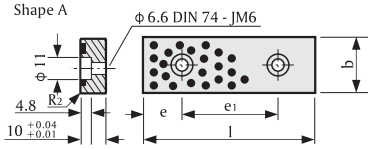

Shape F

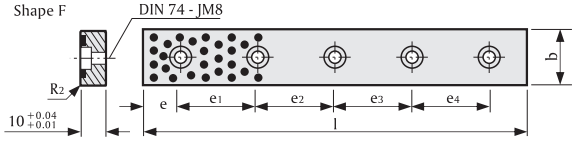

Shape E

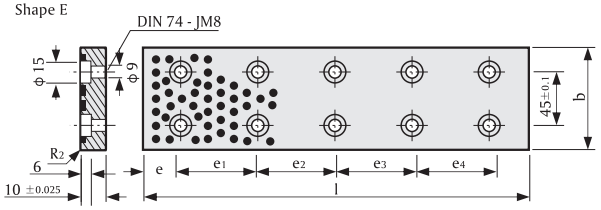



材质 Material

高力黄铜
Bronze with Non-Liquid Lubricant.
Oilless lubricating.

Execution:

Sliding faces ground.

注意 Note

Screws not included.



运动方向
Direction of Motion
Embedded non-liquid lubricant
(section)

50152.

规格代码 Order No	Shape	b 0 -0.2	l 0 -0.2	e ±0.1	e1 ±0.1	e2 ±0.1	e3 ±0.1	e4 ±0.1	Screw DIN 7984	Number or screw holes
50152.018.075	A	18	75	15	45	-	-	-	M6 ×20	2
100			100	25	50	-	-	-		
125			125		75	-	-	-		
150			150		100	-	-	-		
50152.028.075	A	28	75	15	45	-	-	-	M6 ×20	2
100			100	25	50	-	-	-		
125			125		75	-	-	-		
150			150		100	-	-	-		
50152.035.100	F	35	100	20	60	-	-	-	M8 ×20	2
150			150		55	55	-	-		3
200			200		55	50	55	-		4
250			250		70	70	70	-		
300			300		65	65	65	65		5
350			350		80	75	75	80		
50152.038.075	A	38	75	15	45	-	-	-	M6 ×20	2
100			100	25	50	-	-	-		
125			125		75	-	-	-		
150			150		100	-	-	-		
50152.048.075	A	48	75	15	45	-	-	-	M6 ×20	2
100			100	25	50	-	-	-		
125			125		75	-	-	-		
150			150		100	-	-	-		
50152.050.100	F	50	100	20	60	-	-	-	M8 ×20	2
150			150		55	55	-	-		3
200			200		55	50	55	-		4
250			250		70	70	70	-		
300			300		65	65	65	65		5
350			350		80	75	75	80		
400			400		90	90	90	90		
50152.075.150	E	75	150	20	110	-	-	-	M8 ×20	4
200			200		80	80	-	-		6
250			250		105	105	-	-		
300			300		85	90	85	-		8
400			400		120	120	120	-		
500			500		115	115	115	115		10

订单方式
Ordering Code (example):

Flat Guide Bar	=	50152.
b=18 mm	=	018.
l=75 mm	=	075
Order No	=50152.018.075	

NYC

50153

斜锲上滑块, VDI 3357标准
Retaining Plates, VDI 3357
Bronze with Non-Liquid Lubricant

Shape A

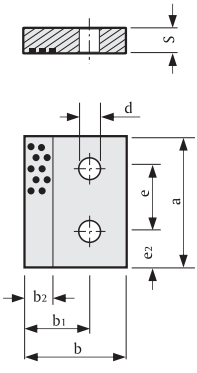

Shape B

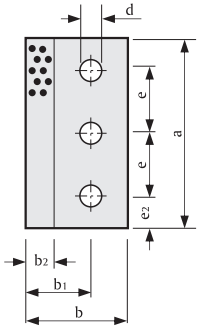

Shape C

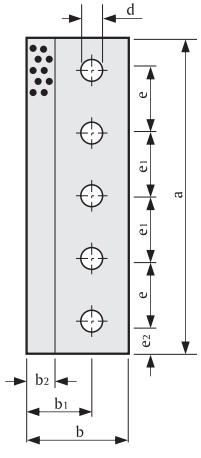

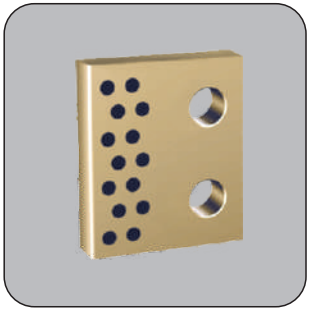

Mounting Examples:

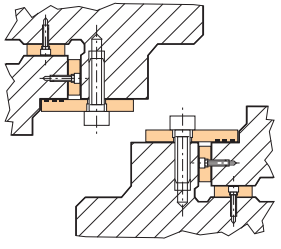

50153.

规格代码 Order No	Shape	b $^{0}_{-0.2}$	s ±0.025	a $^{0}_{-0.2}$	b_2	b_1 ±0.1	d	e ±0.1	e_1 ±0.1	e_2 ±0.1	Number or screw holes
50153.035.10.160	A	35	10	160	10	20	11	70	-	-	2
200				200				110	-	-	
250	B			250				80	-	-	3
50153.045.15.160	A	45	15	160	15	30	13.5	70	-	-	2
200				200				110	-	-	
250	B			250				80	-	-	3
50153.055.15.160	A	55	15	160	20	35	17.5	70	-	-	2
200				200				110	-	-	
250	B			250				80	-	-	3
50153.075.25.160	A	75	25	160	25	40	17.5	70	-	-	2
200				200				110	-	-	
250	B			250				80	-	-	3
50153.080.30.160	A	80	30	160	30	60	22	70	-	-	2
200				200				110	-	-	
250	B			250				80	-	-	3
300				300				105	-	-	
350				350				130	-	-	
400	C			400				80	75	45	5
50153.100.25.160	A	100	25	160	30	60	17.5	70	-	-	2
200				200				110	-	-	
250	B			250				80	-	-	3
400	C			400				80	75	45	5
50153.100.30.160	A	100	30	160	30	60	22	70	-	-	2
200				200				110	-	-	
250	B			250				80	-	-	3
400	C			400				80	75	45	5
50153.125.25.160	A	125	25	160	30	75	17.5	70	-	-	2
200				200				110	-	-	
250	B			250				80	-	-	3
400	C			400				80	75	45	5
50153.125.30.160	A	125	30	160	30	75	22	70	-	-	2
200				200				110	-	-	
250	B			250				80	-	-	3
300				300				105	-	-	
350				350				130	-	-	
400	C			400				80	75	45	5
450				450				80	95	50	
500				500				80	120	50	

材质 Material

高力黄铜
Bronze with Non-Liquid Lubricant.
Oilless lubricating.

注意 Note

Screws not included.

适配 Fixing

Use socket cap screws DIN EN ISO 4762
M10 × 30
M12 × 40
M16 × 50
M16 × 60
M20 × 70



运动方向
Direction of Motion
Embedded non-liquid lubricant
(section)

订单方式
Ordering Code (example):

Retaining Plates	=50153.	
b=125 mm	=	125.
s=25 mm	=	25.
a=160mm	=	160
Order No	=50153.125.25.160	

NYC

50154

斜锲上滑块
Retaining Plates
Bronze with Non-Liquid Lubricant

Shape A

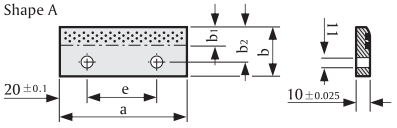

Shape B

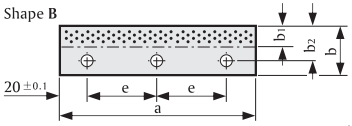

Shape C

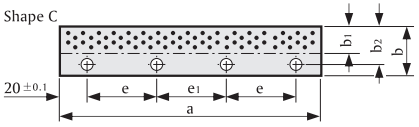

Shape D

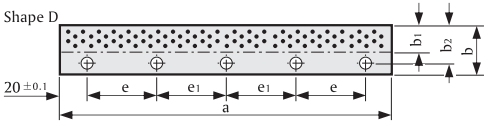

Shape E

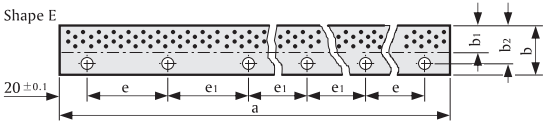

Shape F

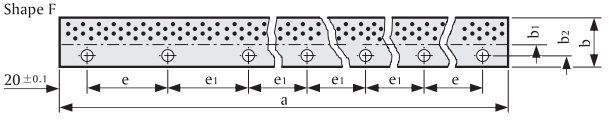

Shape G

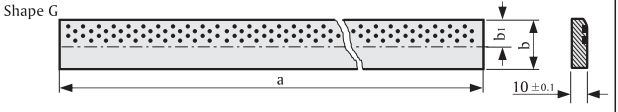



Mounting Examples:

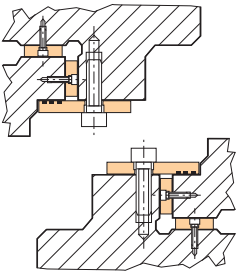

50154.

规格代码 Order No	Shape	a $^{0}_{-0.2}$	b $^{0}_{-0.2}$	b_1	b_2 ±0.1	e ±0.1	e_1 ±0.1	Number or screw holes
50154.032.0100	A	100	32	10	21	60	-	2
0150	B	150				55	-	3
0160	B	160				60	-	3
50154.050.0200	C	200	50	30	36	50	60	4
0250	C	250				70	70	4
0300	D	300				65	65	5
0350	D	350				80	75	5
0400	D	400				90	90	5
0500	E	500				95	90	6
0600	E	600				115	110	6
0800	F	800				130	125	7
0605	G	605				-	-	-
1005	G	1005				-	-	-

材质 Material

高力黄铜
Bronze with Non-Liquid Lubricant.
Oilless lubricating.

注意 Note

Screws not included.

适配 Fixing

Use sockcap screws DIN EN ISO 4762
M10 × 25



运动方向
Direction of Motion
Embedded non-liquid lubricant
(section)

订单方式
Ordering Code (example):

Retaining Plates	=	50154.
b=32 mm	=	032.
a=160 mm	=	0160
Order No	=	50154.032.0160

NYC

50155

导板
Flat Guide Bars
Bronze with Non-Liquid Lubricant

Shape A

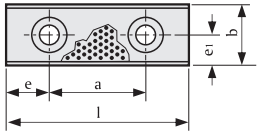

Shape B

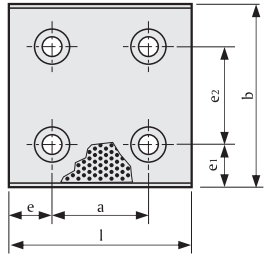



运动方向
Note:
Direction of Motion for
b=28 / 38mm

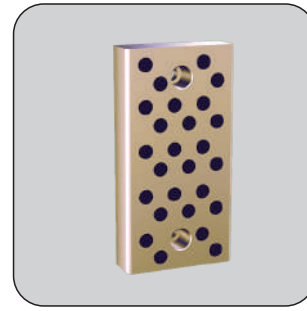

Shape C

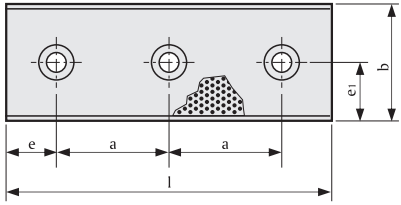



运动方向
Direction of Motion
Embedded non-liquid
lubricant (section)

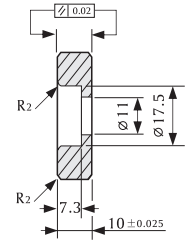

50155.

规格代码 Order No	Shape	b $^{0}_{-0.2}$	l $^{0}_{-0.2}$	e ±0.1	a ±0.1	e_1 ±0.1	e_2 ±0.1	Number or screw holes
50155.028.075	A	28	075	15	45	14	-	2
100	A		100	25	50			
125	A		125		75			
150	A		150		100			
50155.038.075	A	38	075	15	45	19	-	2
100	A		100	25	50			
125	A		125		75			
150	A		150		100			
50155.048.075	A	48	075	15	45	24	-	2
100	A		100	25	50			
125	A		125		75			
150	A		150		100			
200	A		200	50	100			
50155.058.075	A	58	075	15	45	29	-	2
100	A		100	25	50			
125	A		125		75			
150	A		150		100			
200	A		200	50	100			
50155.075.075	A	75	075	15	45	37.5	-	2
100	A		100	25	50			
125	A		125		75			
150	A		150		100			
200	C		200		75			3
50155.100.100	B	100	100	25	50	25	50	4
125	B		125		75			
150	B		150		100		50	
200	B		200		150			
250	B		250		200			
50155.125.150	B	125	150	25	100	37.5	100	4
200	B		200		150			
250	B		250		200			
50155.150.150	B	150	150	25	100	25		4
200	B		200		150			

Description:

Flat Guide bars find preference in large press tools with considerable lateral work forces. Bronze pads with embedded non-liquid lubricant ensure maintenance free, self-lubricating service even in arduous multi-shift applications.

材质 Material

高力黄铜
Bronze with Non-Liquid Lubricant.
Oilless lubricating.

注意 Note

Screws not included.

适配 Fixing

Use socket cap screws DIN 7984
M10 × 25

订单方式
Ordering Code (example):

Flat Guide Bar	=	50155.
b=28 mm	=	028.
l=100 mm	=	100
Order No	=	50155.028.100

NYC

50156

簿型导板
Flat Guide Bars
Bronze with Non-Liquid Lubricant

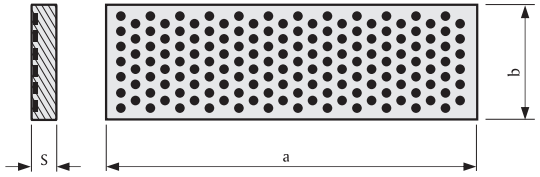



材质 Material

高力黄铜
Bronze with Non-Liquid Lubricant.
Oilless lubricating.

Execution:

Sliding faces ground.



运动方向
Direction of Motion
Embedded non-liquid lubricant
(section)

50156.

规格代码 Order No	b $^{-0.1}_{-0.2}$	s $^{0}_{-0.015}$	a $^{0}_{-0.2}$
50156.025.005.050	25	5	50
071			71
090			90
50156.025.006.050	25	6	50
063			63
080			80
100			100
125			125
50156.040.005.050	40	5	50
071			71
090			90
50156.040.006.080	40	6	80
100			100
125			125
160			160
200			200
50156.063.006.080	63	6	80
100			100
125			125
160			160
50156.063.008.125	63	8	125
160			160
200			200
250			250
315			315

订单方式
Ordering Code (example):

Flat Guide Bar	=	50156.
b=25 mm	=	025.
s=6 mm	=	006.
a=50mm	=	050
Order No	=	50156.025.006.050

NYC

50157

簿型导板
Flat Guide Bars
Bronze with Non-Liquid Lubricant

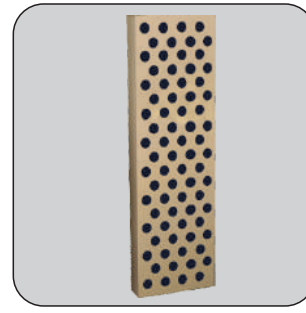

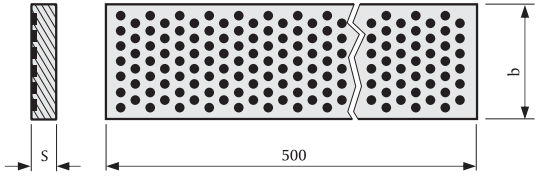

50157.

规格代码 Order No	b $^{-0.1}_{-0.2}$	s $^{0}_{-0.015}$	a $^{0}_{-0.5}$
50157.025.006.500	25	6	500
50157.040.006.500	40	6	500
50157.063.008.500	63	8	500
50157.080.010.500	80	10	500

材质 Material

高力黄铜
Bronze with Non-Liquid Lubricant.
Oilless lubricating.

Execution:

Sliding faces ground.



运动方向
Direction of Motion
Embedded non-liquid lubricant
(section)

订单方式
Ordering Code (example):

Flat Guide Bar	=	50157.
b=25mm	=	025.
s= 6 mm	=	006.
l=500mm	=	500
Order No	=	50157.025.006.500

NYC

50160

铁镍烧结自润滑导板
Sliding Pads
Steel Based,Iron Sinter Lubricating Alloy Layer

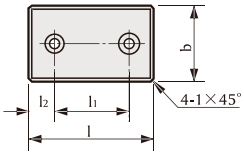

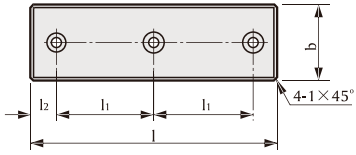

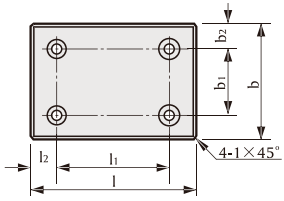

Shape A

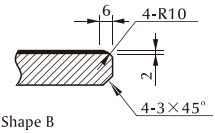

Shape B

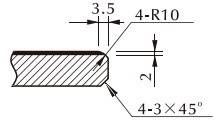

Shape C

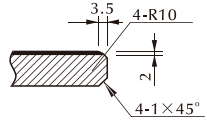



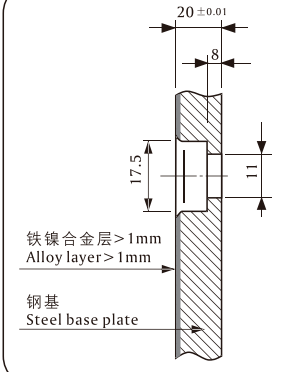

50160.

规格代码 Order No	Shape	b -0.1 -0.3	l -0.1 -0.3	b1 ±0.1	b2 ±0.1	l1 ±0.1	l2 ±0.1	Number or screw holes
50160.028.075	C	28	75	-	-	45	15	2
100			100	-	-	50	25	
150			150	-	-	100	25	
50160.038.075		38	75	-	-	45	15	
100			100	-	-	50	25	
150			150	-	-	100	25	
50160.048. 75	B	48	75	-	-	45	15	
100			100	-	-	50	25	
125			125	-	-	75	25	
150			150	-	-	100	25	
200			200	-	-	100	50	
250			250	-	-	100	25	3
50160.058.075		58	75	-	-	45	15	2
100			100	-	-	50	25	
150			150	-	-	100	25	
50160.075.075	A	75	75	-	-	25	25	
100			100	-	-	50	25	
125			125	-	-	75	25	
150			150	-	-	100	25	
200			200	-	-	150	25	
250			250	-	-	100	25	3
300			300	-	-	100	50	
50160.100.100		100	100	50	25	50	25	4
125			125			75	25	
150			150			100	25	
200			200			150	25	
250			250			200	25	
300			300			200	50	
50160.125.125		125	125		37.5	75	25	
150			150			100	25	
200			200			150	25	
250			250			200	25	
300			300			200	50	
50160.150.150		150	150	100	25	100	25	
200			200			150	25	
250			250			200	25	

材质 Material

钢基+合金层
Steel + Alloy layer sintered

注意 Note

Screws not included.

订单方式
Ordering Code (example):

Flat Guide Bar	=	50160.
b=28 mm	=	028.
l=100 mm	=	100
Order No	=	50160.028.100

NYC

50161

铁镍烧结自润滑导板，VDI 3357标准
Sliding Pads, VDI3357,
Steel Based,Iron Sinter Lubricating Alloy Layer



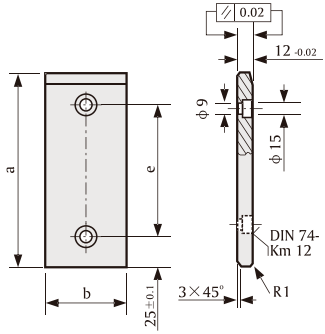

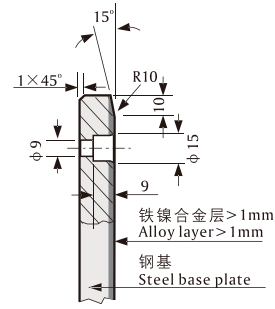

50161.

规格代码 Order No	b 0 -0.2	a 0 -0.2	e ±0.1	Number of Screw holes
50161.030.080	30	80	30	2
100		100	50	2
125		125	75	2
160		160	110	2
200		200	150	2
50161.040.080	40	80	30	2
100		100	50	2
125		125	75	2
160		160	110	2
200		200	150	2
50161.050.080	50	80	30	2
100		100	50	2
125		125	75	2
160		160	110	2
200		200	150	2
50161.060.080	60	80	30	2
100		100	50	2
125		125	75	2
160		160	110	2
200		200	150	2
50161.080.080	80	80	30	2
100		100	50	2
125		125	75	2
160		160	110	2
200		200	150	2

材质 Material

钢基+合金层
Steel + Alloy layer sintered

注意 Note:

Screws not included

适配 Fixing:

Use countersunk head screw
DIN EN ISO 4762 M8 × 25

订单方式
Ordering Code (example):

Sliding Pad	=50161.	
b=30 mm	=	030.
a=80mm	=	080
Order No	=50161.030.080	

NYC

50162

铁镍烧结自润滑导板，VDI 3357标准
Sliding Pads, VDI3357, Steel Based,Iron Sinter Lubricating Alloy Layer

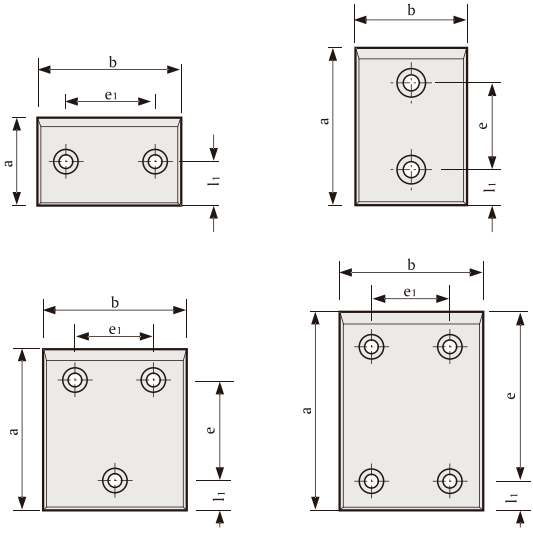



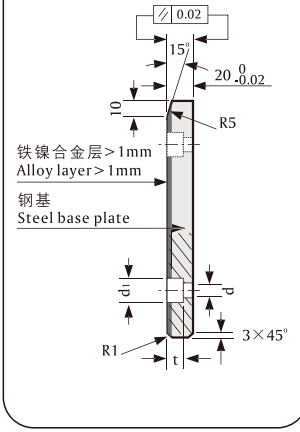

50162.

规格代码 Order No	形状 Shape	b 0 -0.2	a 0 -0.2	l1 ±0.1	e ±0.1	e1 ±0.1	d H13	d1 H13	t +0.5 0	Number of Screw holes
50162.050.080	B	50	80	25	30	-	9	15	9	2
100			100		50	-	13.5	20	13	
125			125		75	-				
160			160		110	-				
200			200		150	-				
50162.080.050	D	80	50	25	-	30	9	15	9	2
080	B	80	80	25	30	-	13.5	20	13	
100			100		50	-				
125			125		75	-				
160			160		110	-				
200			200		150	-				
250			250	40	170	-				
315			315	40	235	-				
50162.100.050	D	100	50	25	-	50	13.5	20	13	2
080			80	40	-	-				
100	B	100	100	25	50	-				
125			125		75	-				
160			160		110	-				
200			200		150	-				
250			250	40	170	-				
315			315	40	235	-				
50162.125.050	D	125	50	25	-	75	13.5	20	13	2
080			80	40	-					
100	G	125	100	25	50					3
125			125		75					
160			160		110					
200			200		150					
250			250	40	170					
315			315	40	235					
50162.160.050	D	160	50	25	-	110	13.5	20	13	2
080			80	40	-					
100	G	160	100	25	50					3
125			125		75					
160			160		110					
200			200		150					
250	H	160	250	40	170					4
315			315	40	235					

材质 Material

钢基+合金层
Steel + Alloy layer sintered

注意 Note:

Screws not included

适配 Fixing:

Use countersunk head screw
DIN EN ISO 4762
d=⌀9 M 8 × 25
d=⌀13.5 M 12 × 25

订单方式 Ordering Code (example):

Sliding Pad	=50162
b=100 mm	= 100.
a=315mm	= 315
Order No	=50162.100.315

NYC

50163

铁镍烧结自润滑导板，纳姆斯标准
Sliding Pads to NAAMS
Steel Based,Iron Sinter Lubricating Alloy Layer

Shape A

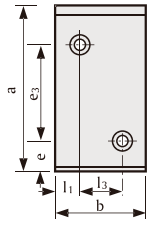

Shape B

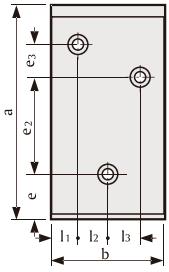

Shape C

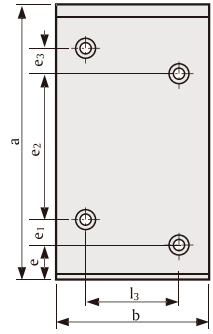

Shape D

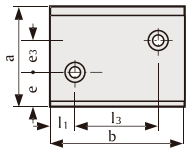



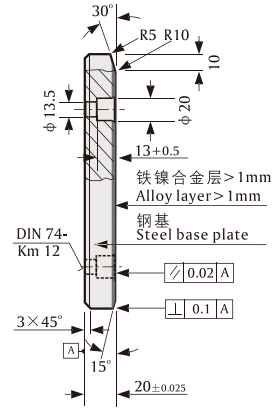

50163.

规格代码 Order No	形状 Shape	b ±0.1	a 0 -0.2	l1 ±0.1	l2 ±0.1	l3 ±0.1	e ±0.1	e1 ±0.1	e2 ±0.1	e3 ±0.1	Number of Screw holes
50163.050.100	A	50	100	25	-	-	30	-	-	30	2
150	A	50	150	25	-	-	30	-	-	80	2
200	A	50	200	25	-	-	40	-	-	120	2
50163.080.100	A	80	100	20	-	40	30	-	-	30	2
150	A	80	150	20	-	40	30	-	-	80	2
200	A	80	200	20	-	40	40	-	-	120	2
250	A	80	250	20	-	40	40	-	-	170	2
315	B	80	315	20	20	20	40	-	210	25	3
50163.100.050	D	100	50	22	-	56	14	-	-	13	2
080	D	100	80	22	-	56	30	-	-	20	2
100	A	100	100	22	-	56	30	-	-	30	2
150	A	100	150	22	-	56	30	-	-	80	2
200	B	100	200	22	28	28	40	-	95	25	3
250	B	100	250	22	28	28	40	-	145	25	3
315	B	100	315	22	28	28	40	-	210	25	3
50163.125.080	D	125	80	25	-	75	30	-	-	20	2
100	A	125	100	25	-	75	30	-	-	30	2
150	A	125	150	25	-	75	30	-	-	80	2
200	B	125	200	25	37	38	40	-	95	25	3
250	B	125	250	25	37	38	40	-	145	25	3
315	C	125	315	25	-	75	40	25	185	25	4
50163.160.100	A	160	100	30	-	100	30	-	-	30	2
150	A	160	150	30	-	100	30	-	-	80	2
200	B	160	200	30	50	50	40	-	95	25	3
250	C	160	250	30	-	100	40	25	120	25	4
315	C	160	315	30	-	100	40	25	185	25	4

材质 Material
钢基+合金层
Steel + Alloy layer sintered

注意 Note:
Screws not included

适配 Fixing:
Use socket cap screws DIN EN ISO 4762
M12×30

订单方式
Ordering Code (example):

Sliding Pad	=50163.
b=160 mm	= 160.
a=315mm	= 315
Order No	=50163.160.315

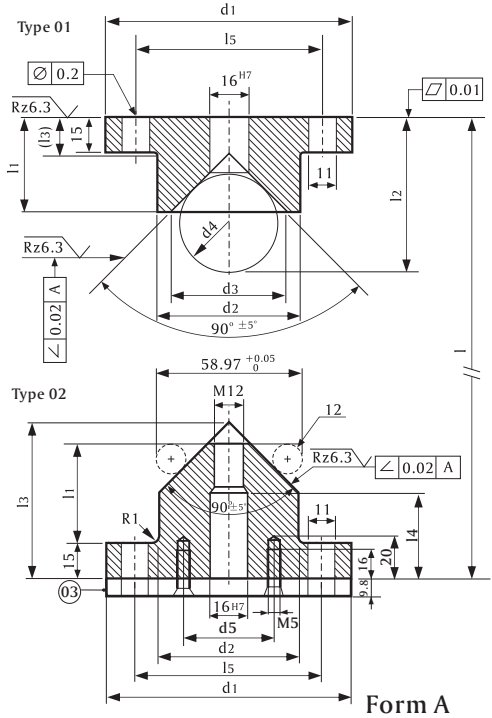

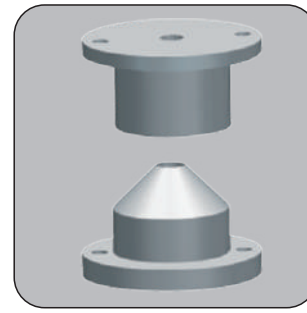

材质 Material

01 02 :16MnCr5 HRC60-62

03 :16MnCr5

注意 Note:
Screws not included

Form A Form B Form C

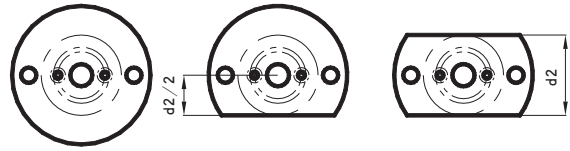

50458.

d1	100	100	120	120
d2	58	58	78	78
d3	48	48	68	68
d4	40	-	50	-
l	80	80	90	90
l1	40	55	50	65
l2	64.28	-	76.36	-
l3	16	64	16	74
l4	-	35	-	45
l5	76	76	96	96
d5	**40.5**	**40.5**	**50.5**	**50.5**
Form	A/B/C	A/B/C	A/B/C	A/B/C
Type	01	02	01	02

订单方式 Ordering Code (example):

Art	d1	l	Form	Type
50458.	100.	80.	A.	01

NYC

50511
50512
50513

钢球保持架/钢球衬套
Ball Retainers

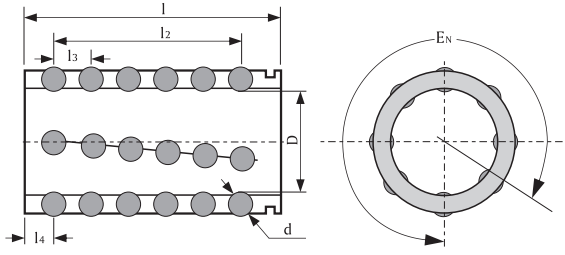

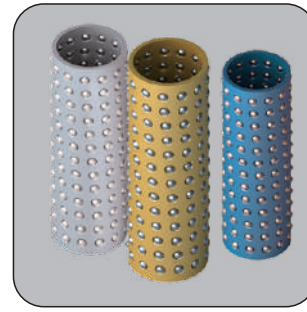

材质 Material

50511 铜基 Copper base
50512 铝基 Aluminium base
50513 塑基 POM base

50511 / 50512 / 50513

D	19	19	20	20	22	22	23	24	25	25	25	27	28	28	30	30
l	50	60	50	60	50	60	60	75	50	60	75	75	60	75	60	75
l_2	8	10	8	10	8	10	10	13	8	10	13	13	8	11	8	11
l_3	5.5	5.5	5.5	5.5	5.5	5.5	5.5	5.45	5.5	5.5	5.45	5.45	6.5	6.5	6.5	6.5
l_4	5.75	5.25	5.75	5.25	5.75	5.25	5.25	4.8	5.75	5.25	4.8	4.8	7.25	5.0	7.25	5.0
d	3	3	3	3	3	3	3	3	3	3	3	3	3	4	4	4
E_n	12	12	12	12	14	14	14	16	16	16	16	16	14	14	14	14
Balls	96	120	96	120	112	140	140	208	128	160	208	208	112	145	112	154

D	32	32	32	36	36	38	38	40	45	45	50	50	60	60	80
l	60	75	90	85	90	70	90	90	90	110	90	110	90	110	130
l_2	8	11	13	12	13	8	11	11	11	13	11	13	11	13	15
l_3	6.5	6.5	6.5	6.5	6.5	8.0	7.9	7.9	7.9	8.0	7.9	8.0	7.9	8.0	8.0
l_4	7.25	5.0	6.0	6.75	6.0	7.0	5.5	5.5	5.5	7.0	5.5	7.0	5.5	7.0	9.0
d	4	4	4	4	4	5	5	5	5	5	5	5	5	5	5
E_n	16	16	16	16	16	16	16	16	18	18	20	20	22	22	28
Balls	128	176	208	192	208	128	176	176	198	234	220	260	242	286	420

订单方式 Ordering Code (example):

Ball Retainers=50511.	Ball Retainers=50512.	Ball Retainers=50513.
D = 19 mm = 019.	D = 19 mm = 019.	D = 19 mm = 019.
l=50mm = 050	l=50mm = 050	l=50mm = 050
Order No =50511.019.050	Order No =50512.019.050	Order No =50513.019.050

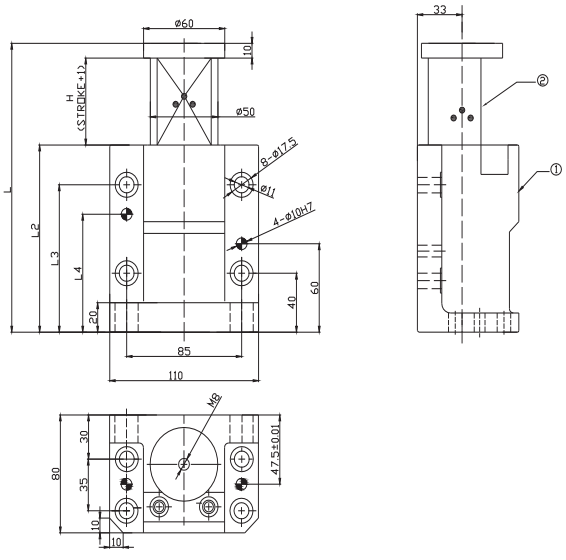

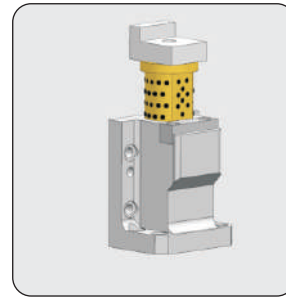

①Material: Steel

②Material: Bronze + Graphite

50449.

Code No.	Stroke+5	Spring tension N	L	L2	L3	L4	H
50449.050	50	2350	195	134	100	90	51
50449.080	80	2500	255	164	130	110	81
50449.100	100	2750	295	184	150	130	101

NYC

50601

提升器
Flange Lifters—Fit type

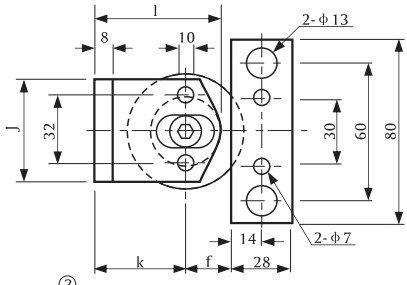

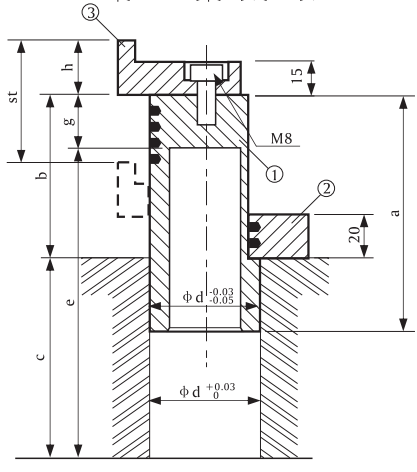



Material

① HT 250
② 45# 钢
③ T10

50601.

st	50	80	100
a	110	160	200
b	75	105	125
c	105	155	195
d	50	60	75
e	155	230	280
f	19	25	30
g	25	30	40
h	25	25	30
J	45	50	60
k	40	40	55
l	55	60	75

订单方式 Ordering Code (example):

Guide bush =50601.
st=100 mm = 100
Order No =50601.100

NYC

50088
50089

外导板
Guide Brackets

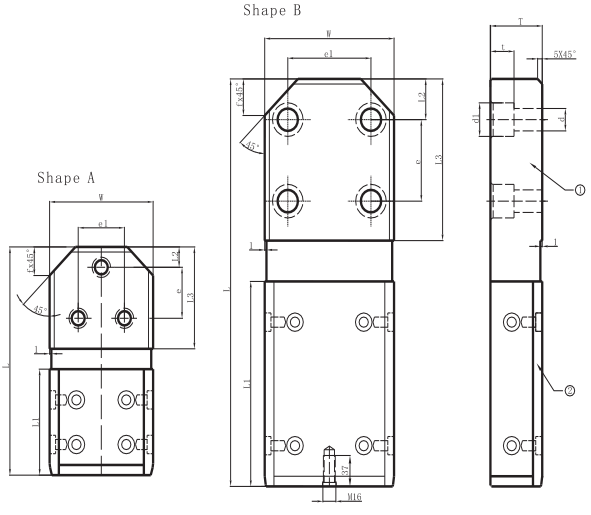

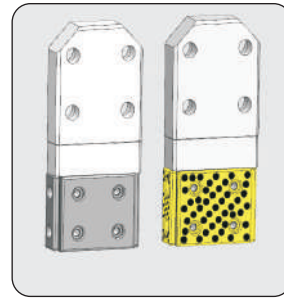

Material:

50088:
①Steel, with bronze wear plate

50089:
①Steel, with sintered wear plate

50088./50089.

Catalog No	形式 Shape	W (f7)	L	T	L1	L2	L3	e	e1	d	d1	f	t	Screw holes
50088 50089	A	112	200	45	75	20	90	50	50	18	26	28	21	3
	A	112	224	45	100	20	90	50	50	18	26	28	21	3
	A	112	250	45	125	20	100	50	50	18	26	28	21	3
	B	140	315	45	125	40	150	80	90	22	33	36	25.5	4
	B	140	400	45	200	40	150	80	90	22	33	36	25.5	4
	B	190	400	56	200	40	150	80	90	22	33	36	25.5	4
	B	240	500	56	200	40	250	160	160	26	40	36	30.5	4
	B	240	630	56	300	40	250	160	160	26	40	36	30.5	4

订单方式 Ordering Code(example):

Guide Bracket	= 50088.	Guide Bracket	= 50089.
W=112m	= 112.	W=112mm	= 112.
L=200mm	= 200.	L=200mm	= 200.
T=45mm	= 45	T=45mm	= 45
Order No	= 50088.112.200.45	Order No	= 50089.112.200.45

NYC

50462
50463

直孔/肩型凹模
Button Dies

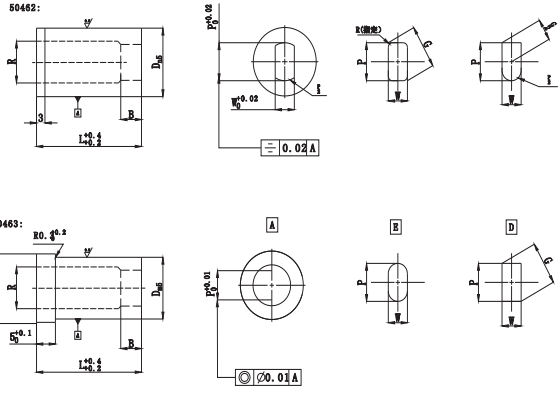

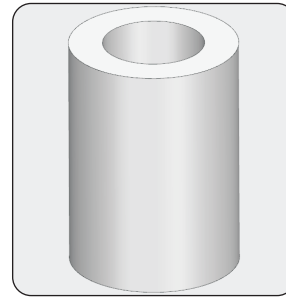

Material: HSS
Hardness: 62±2 HRC

50462./50463.

Type	D	Cutting edge B: S	A	C	P	W P/G	R MAX	L 20	22	25	28	30	32	35	40
A D E R G J	08	4	8°	—	1.50-3.20	—	4.0	●	●	●	●	●	●	●	
	10	4	8°	—	1.50-5.00	1.20-5.00	5.8	●	●	●	●	●	●	●	
	13	5	8°	—	1.50-7.20	2.00-7.20	8.0	●	●	●	●	●	●	●	
	16	5	8	20	5.00-8.80	2.00-8.80	9.5	●	●	●	●	●	●	●	
	20	5	12	20	7.00-11.00	3.20-11.00	12.0	●	●	●	●	●	●	●	
	22	6	12	20	9.00-14.00	4.00-14.00	15.0	●	●	●	●	●	●	●	
	25	6	12	20	11.00-16.50	4.80-16.50	17.5	●	●	●	●	●	●	●	
	32	6	12	20	13.00-20.00	5.50-20.00	21.0	●	●	●	●	●	●	●	
	38	8	12	20	16.00-26.00	6.40-26.00	27.0	●	●	●	●	●	●	●	
	40	8	12	20	16.00-26.00	6.40-26.00	27.0	●	●	●	●	●	●	●	
	45	8	12	20	19.00-35.00	8.00-35.00	36.0		●	●	●	●	●	●	●
	50	8	12	20	22.00-40.00	9.00-40.00	41.0		●	●	●	●	●	●	●
	56	8	12	20	25.00-45.00	10.00-45.00	46.0		●	●	●	●	●	●	●
	63	8	12	20	28.00-50.00	11.00-50.00	51.0		●	●	●	●	●	●	●
	71	8	12	20	31.00-56.00	12.00-56.00	57.0		●	●	●	●	●	●	●
	76	8	12	20	39.00-60.00	15.00-60.00	61.0			●	●	●	●	●	●
	85	8	12	20	43.00-66.00	21.00-66.00	67.0			●	●	●	●	●	●
	90	8	12	20	45.00-70.00	25.00-70.00	71.0			●	●	●	●	●	●
	100	8	12	20	50.00-78.00	33.00-78.00	79.0			●	●	●	●	●	●

订单方式 Ordering Code(example):

Catalog No.	D	—	B	—	L	—	P	—	W
50462G	- 16		- S		- 28		- P8.3		- W6

NYC

50464

凹模
Button Dies

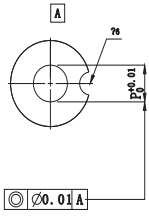



Material: HSS
Hardness: 62±2 HRC

50464.

Catalog No.			Cutting B: S A B	P	W P/G	L									
Type		D				13	16	20	22	25	28	30	32	35	40
50464	A D R E G J	10	4 5 3	1.60-6.80	1.30-6.80	●	●	●	●	●	●	●	●	●	
		13	5 8 3	3.00-8.80	1.90-8.80	●	●	●	●	●	●	●	●	●	
		16	5 8 3	7.40-10.80	1.90-10.80			●	●	●	●	●	●	●	
		20	5 10 3	9.50-13.60	1.90-13.60			●	●	●	●	●	●	●	
		22	6 10 3	10.50-15.00	1.90-15.00			●	●	●	●	●	●	●	
		25	6 10 3	12.00-17.00	1.90-17.00			●	●	●	●	●	●	●	
		32	6 12 3	16.00-22.00	1.90-22.00			●	●	●	●	●	●	●	
		38	8 12 3	18.00-27.00	1.90-27.00			●	●	●	●	●	●	●	
		40	8 12 3	18.00-27.00	1.90-27.00			●	●	●	●	●	●	●	
		45	8 12 3	18.00-35.00	2.40-35.00				●	●	●	●	●	●	●
		50	8 12 3	18.00-40.00	4.00-40.00				●	●	●	●	●	●	●
		56	8 12 3	18.00-45.00	4.00-45.00				●	●	●	●	●	●	●
		63	8 12 3	18.00-50.00	4.00-50.00				●	●	●	●	●	●	●
		71	8 12 3	18.00-56.00	4.00-56.00				●	●	●	●	●	●	●
		76	8 12 3	25.00-60.00	5.60-60.00					●	●	●	●	●	●
		85	8 12 3	25.00-66.00	5.60-66.00					●	●	●	●	●	●
		90	8 12 3	32.00-70.00	5.60-70.00					●	●	●	●	●	●
		100	8 12 3	36.00-78.00	5.60-78.00					●	●	●	●	●	●

订单方式 Ordering Code(example):

Catalog No.	L	—	P	—	W	—	R	—	LE
50464R25	-30		-P13		-W8		-R2		-LE90

NYC

50465

凹模
Button Dies

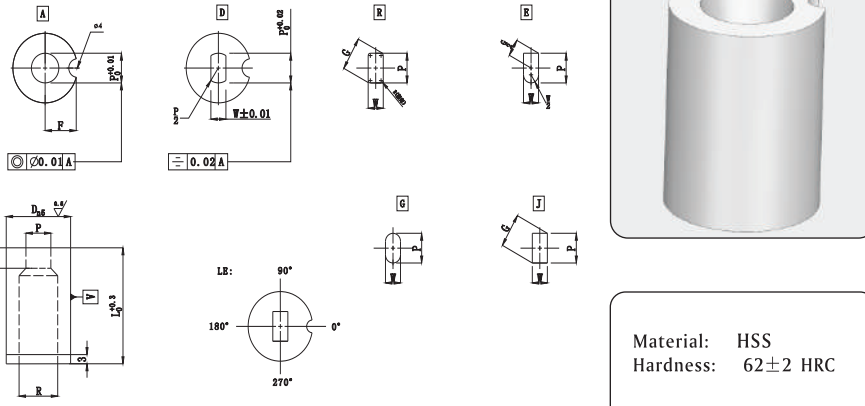

Material: HSS
Hardness: 62±2 HRC

50465.

Catalog No.			B: S	B: A	P	W P/G	R max	L				
Type		D						25	28	30	32	35
50465	A D E R G J	13	5	8	1.50-7.20	2.00-7.20	8.0	●	●	●	●	●
		16	5	8	5.00-8.80	2.40-8.80	9.5	●	●	●	●	●
		20	5	12	7.00-11.00	3.20-11.00	12.0	●	●	●	●	●
		25	6	12	11.00-16.50	4.80-16.50	17.5	●	●	●	●	●
		32	8	12	13.00-20.00	5.50-20.00	21.0	●	●	●	●	●
		38	8	12	16.00-26.00	6.40-26.00	27.0	●	●	●	●	●
		40	8	12	16.00-26.00	6.40-26.00	27.0	●	●	●	●	●
		45	8	12	19.00-35.00	8.00-35.00	36.0	●	●	●	●	●
		50	8	12	22.00-40.00	9.00-40.00	41.0	●	●	●	●	●
		56	8	12	25.00-45.00	10.00-45.00	46.0	●	●	●	●	●

订单方式 Ordering Code(example):

Catalog No.	L	P	W	R	LE
50465R25	-30	-P13	-W8	-R2	-LE90

NYC

50470

带肩型凸模
Shoulder Punches

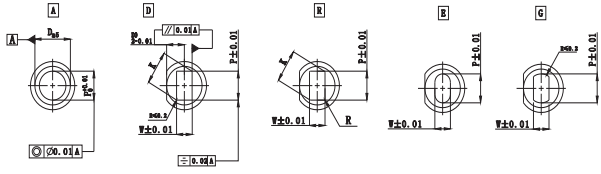

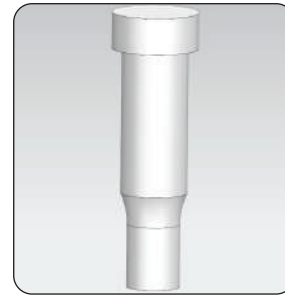

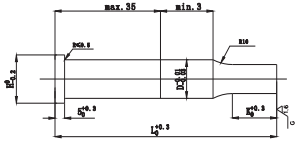



Material: HSS
Hardness: 62±2 HRC

50470.

Catalog No.				L	Specify Unit 0.01mm			K		H
					A	D R E G				
	Shape	K	D		min.P.max	P.Kmax	P.Wmin	S	L	
50470	A D R E G	S L	3	(S) 40 50 60 70 80 (L) 50 60 70 80	1.00～2.99	—	—	8	13	5
			4		1.00～3.99	3.97	1.00			7
			5		2.00～4.99	4.97	1.20			8
			6		2.00～2.99	5.97	1.50			9
			8	(S) (40) 50 60 70 80 90 100 (L) 50 60 70 80 90 100	3.00～7.99	7.97	2.00	13	19	11
			10		3.00～9.99	9.97	2.50			13
			13		6.00～12.99	12.97	3.00			16
			16	(S) (40) 50 60 70 80 90 100 (L) 60 70 80 90 100	10.00～15.99	15.97	4.00	19	25	19
			20		13.00～19.99	19.97	5.00			23
			25		13.00～19.99	24.97	6			28

※L(40)时 K=8;

订单方式 Ordering Code(example):

Catalog No.	L	P	W	R	LE

50470AS10	-80	-P8.5			
50470RL25	-90	-P21.00	-W12.40		-LE90

NYC®

50471

中心销肩型凸模
Ejector & Shoulder Punches

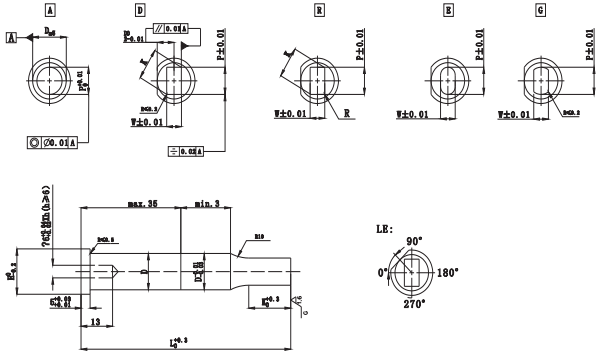

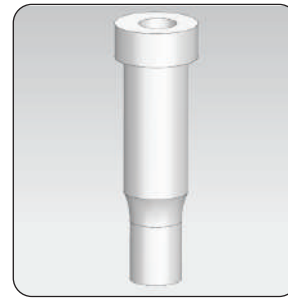

Material: HSS
Hardness: 62±2 HRC

50471.

Catalog No.				L	Specify Unit 0.01mm A	Specify Unit 0.01mm D R E G		K		H
	Shape	K	Dm5		min.P.max	P.Kmax	P.Wmin	S	L	
50471	A D R E G	S L	10	(S) (40) 50 60 70 80 90 100 (L) 50 60 70 80 90 100	3.00～9.99	9.97	2.50	13	19	13
			13		6.00～12.99	12.97	3.00			16
			16	(S) (40) 50 60 70 80 90 100 (L) 60 70 80 90 100	10.00～15.99	15.97	4.00	19	25	19
			20		13.00～19.99	19.97	5.00			23
			25		18.00～24.99	24.97	6.00			28
			32	(S) (40) (50) 60 70 80 90 100 110 120 (L) 60 70 80 90 100 110 120	20.00～31.99	31.97	7.00			35
			38		28.00～37.99	37.97	8.00			41
			45		35.00～44.99	44.97	9.00			48

※L(40)D3-25时B=8; D32-45时B=6

※L(50)时B=13

订单方式 Ordering Code(example):

Catalog	L	–	P	–	W	–	R	–	LE
50471AS10	- 80		- P8.5						
50471RL16	- 90		- P13		- W8		- R2		- LE90

NYC®

50473

中心销顶料凸模
Ejector & Shoulder Punches

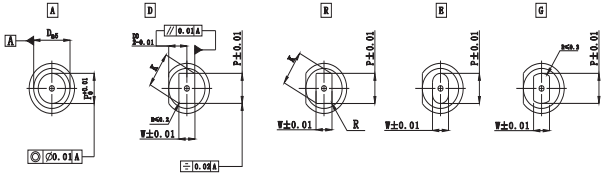

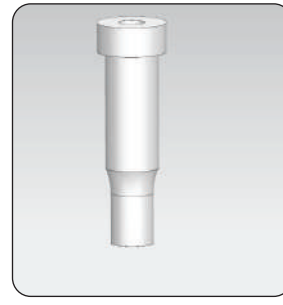

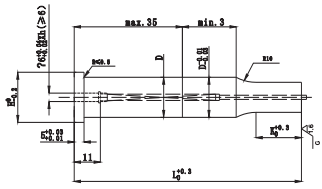

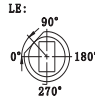

Material: HSS
Hardness: 62±2 HRC

50473.

Catalog No.				L	Specify Unit 0.01mm A	Specify Unit 0.01mm D R E G		K		H
	Shape	K	Dm5		min.P.max	P.Kmax	P.Wmin	S	L	
50473	A D R E G	S L	6	(S) 50 60 70 80 90 (L) 60 70 80 90	2.00~5.99	5.97	1.50	8	13	9
			8		3.00~7.99	7.97	2.00	13	19	11
			10	(S) (60) 70 80 90 100 (L) 70 80 90 100	3.00~9.99	9.97	3.00			13
			13		6.00~12.99	12.97	6.00			16
			16		10.00~15.99	15.97	6.00	19	25	19
			20		13.00~19.99	19.97	6.00			23
			25		18.00~24.99	24.97	6.00			28
			32	(S) (60) 70 80 90 100 110 120 (L) 70 80 90 100 110 120	23.00~31.99	31.97	7.00			35
			38		30.00~37.99	37.97	8.00			41
			45		36.00~44.99	44.97	9.00			48

※L(60)时B=13;

订单方式 Ordering Code(example):

Catalog No.	L	–	P	–	W	–	R	–	LE
50473AS10	-80		-P8.5						
50473RL16	-90		-P13		-W8		-R2		-LE90

NYC

50474

球锁紧凸模-轻载型
Ball-Lock Punches-Light Load

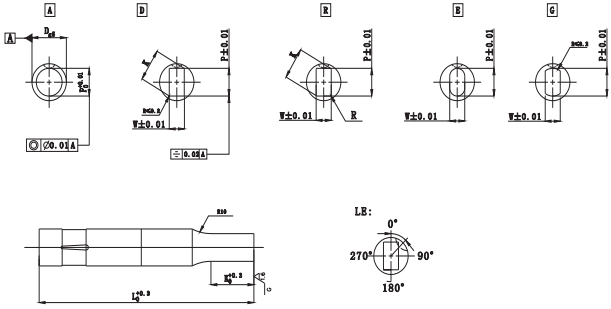



Material: HSS
Hardness: 62±2 HRC

50474.

Catalog No.				L	Specify Unit 0.01mm			K
					A	D R E G		
	Shape	K	D		min.P.max	P.K max	P.W min	
50474	A D R E G	S	10	63 71 74 80 90	3.00~9.97	9.90	2.50	13
			13		6.00~12.97	12.90	3.00	
			16		10.00~15.97	15.90	4.00	19
			20		13.00~19.97	19.90	5.00	
			25		18.00~24.97	24.90	6.00	
			32		22.00~31.97	31.90	7.00	
		L	10	71 74 80 90	3.00~9.97	9.90	2.50	19
			13		6.00~12.97	12.90	3.00	
			16		10.00~15.97	15.90	4.00	25
			20		13.00~19.97	19.90	5.00	
			25		18.00~24.97	24.90	6.00	
			32		22.00~31.97	31.90	7.00	

订单方式 Ordering Code(example):

Catalog No.	L	-	P	-	W	-	R	-	LE

50474AS10	-80	-P8.5			
50474RL16	-90	-P12.00	-W8.00	-R2.00	-LE90

NYC

50475

球锁紧凸模—重载型
Ball-Lock Jector Punches-heavy load

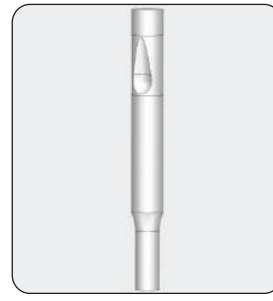

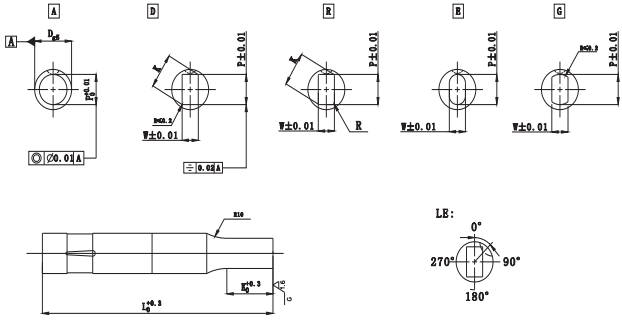

Material: HSS
Hardness: 62±2 HRC

50475.

Catalog No.				L	Specify Unit 0.01mm			K
					A	D R E G		
	Shape	K	D		min.P.max	P.Kmax	P.Wmin	
50475	A D R E G	S	10	71 80 90 100	3.00~9.97	9.90	2.50	13
			13		6.00~12.97	12.90	3.00	
			16		10.00~15.97	15.90	4.00	19
			20		13.00~19.97	19.90	5.00	
			25		18.00~24.97	24.90	6.00	
			32		22.00~31.97	31.90	7.00	
		L	10	80 90 100	3.00~9.97	9.90	2.50	19
			13		6.00~12.97	12.90	3.00	
			16		10.00~15.97	15.90	4.00	25
			20		13.00~19.97	19.90	5.00	
			25		18.00~24.97	24.90	6.00	
			32		22.00~31.97	31.90	7.00	

订单方式 Ordering Code(example):

Catalog No.	L	-	P	-	W	-	R	-	LE

50475AS10	- 80	- P8.5		
50475RL25	- 90	- P21.00	-W12.40	- LE90

NYC

50476

球锁紧顶料凸模–轻载型
Ball–Lock Ejector Punches–Light Load

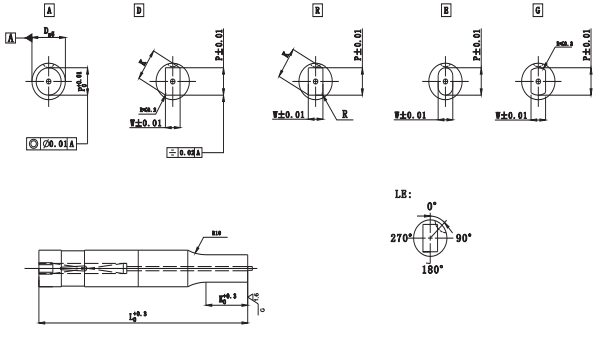



Material: HSS
Hardness: 62±2HRC

50476.

Catalog No.				L	Specify Unit 0.01mm			K
					A	D R E G		
	shape	K	D		min.P.max	P.Kmax	P.Wmin	
50476	A D R E G	S	10	63 71 74 80 90	3.00～9.97	9.90	2.50	13
			13		6.00～12.97	12.90	3.00	
			16		10.00～15.97	15.90	4.00	19
			20		13.00～19.97	19.90	5.00	
			25		18.00～24.97	24.90	6.00	
			32		22.00～31.97	31.90	7.00	
		L	10	71 74 80 90	3.00～9.97	9.90	2.50	19
			13		6.00～12.97	12.90	3.00	
			16		10.00～15.97	15.90	4.00	25
			20		13.00～19.97	19.90	5.00	
			25		18.00～24.97	24.90	6.00	
			32		22.00～31.97	31.90	7.00	

订单方式 Ordering Code(example):

Catalog No.	L	–	P	–	W	–	R	–	LE

50476AS10	-80	-P8.5		
50476RL25	-90	-P21.00	-W12.40	-LE90

NYC

50477

球锁紧顶料凸模–重载型
Ball–Lock Ejector Punches–Heavy Load

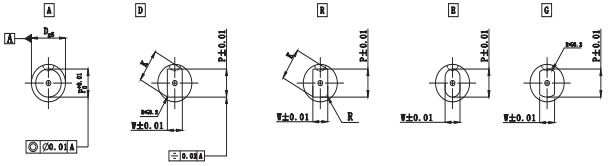

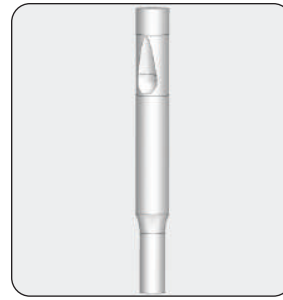

Material: HSS
Hardness: 62±2 HRC

50477.

Catalog No.				L	Specify Unit 0.01mm			K
					A	D R E G		
	Shape	K	D		min.P.max	P.K max	P.W min	
50477	A D R E G	S	10	71 80 90 100	3.00~9.97	9.90	2.50	13
			13		6.00~12.97	12.90	3.00	
			16		10.00~15.97	15.90	4.00	19
			20		13.00~19.97	19.90	5.00	
			25		18.00~24.97	24.90	6.00	
			32		22.00~31.97	31.90	7.00	
		L	10	80 90 100	3.00~9.97	9.90	2.50	19
			13		6.00~12.97	12.90	3.00	
			16		10.00~15.97	15.90	4.00	25
			20		13.00~19.97	19.90	5.00	
			25		18.00~24.97	24.90	6.00	
			32		22.00~31.97	31.90	7.00	

订单方式 Ordering Code(example):

Catalog No.	L	–	P	–	W	–	R	–	LE
50477AS10	- 80		- P8.5						
50477RL13	- 90		- P12.56						- LE90

NYC

50500

球锁紧固定块(轻载紧凑型)
Eall-lock Retainers (Light Load)

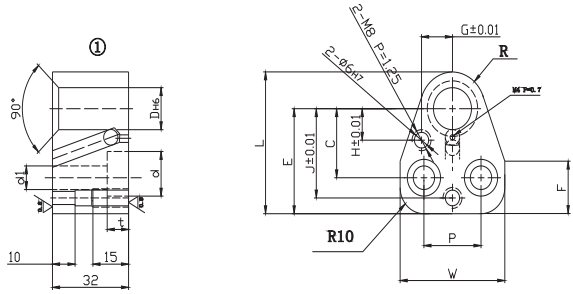

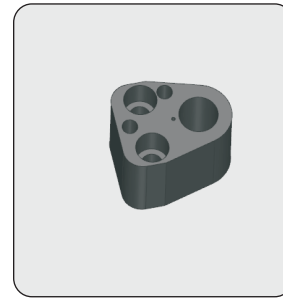

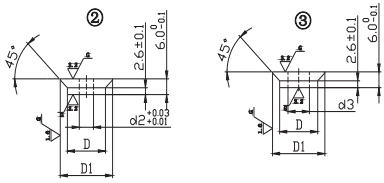

Material:

Steel

Backing plate:HRC56~60

Included:

screws and pin and plug screw

50500.

Type	D	DH6	W	P	C	E	F	G	H	J	L	R	D1	d	d1	t	d2	d3	Accessories
50500-T 50500-A	(10)	+0.009 0	37	20	21	35	20	10	9	29	44.5	9.5	16	14	9	10	6	–	Screw : M8-40 Pin : 6-30 Plug secw : M8 Pin : 6-20
	13	+0.011 0	43	26	23	38		13	11	32	50	12	19					6.2	
	16		44	24	26	40		13	12	34	54	14	22					9	Screw : M10-40 Pin : 6-30 Plug secw : M8 Pin : 6-20
	20	+0.013 0	48	28	27	42		16	14	36	59	17	26	17	11	12		12	
	25		50	30	30	46		18	17	39	65.5	19.5	31	19	13	14		17	
	32	+0.016 0	54	30	33	48		21	20	42	71	23	38					21	Screw : M12-40 Pin : 6-30 Plug secw : M8 Pin : 6-20
	(38)		58	30	35	52		23	23	46	78	26	44					27	

※D(10)仅凸模用

※D(38)仅凹模用

Catalog No	D	¢ Ù	¢ Ù	¢ Ù
50500-T	10~32	●	●	
50500-A	13~38	●		●

订单方式 Ordering Code(example):

Retainner	=	50500-T.
D=13mm	=	013
Order No	=	50500-T.013

NYC

50501

球锁紧固定块(重载紧凑型)
Ball-lock Retainers (Heavy Load)

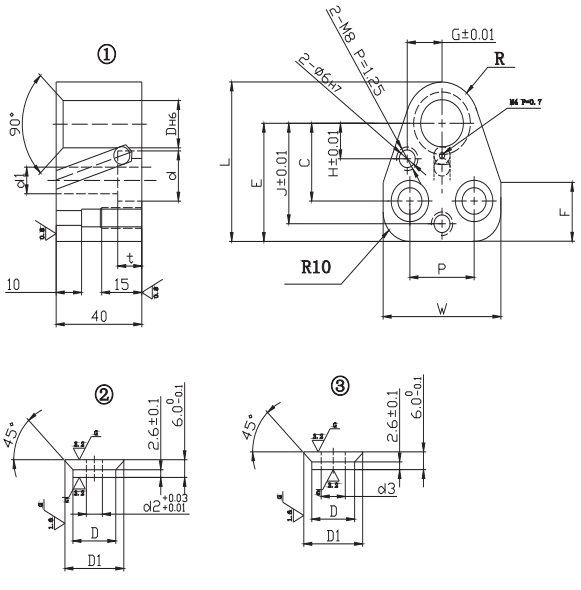



Material:

Steel

Backing plate:HRC56~60

Included:

screws and pin and plug screw

50501.

Type	D H6		W	P	C	E	F	G	H	J	L	R	D1	d	d1	t	d2	d3	Accessories
50501-T 50501-A	10	+0.009 0	37	20	21	35	20	10	9	29	44.5	9.5	16	14	9	10	6	–	Screw : M8-45 Pin : 6-30 Plug secw : M8 Pin : 6-20
	13	+0.011 0	43	26	23	38		13	11	32	50	12	19					6.2	
	16		44	24	26	40		13	12	34	54	14	22					9	Screw : M10-50 Pin : 6-30 Plug secw : M8 Pin : 6-20
	20	+0.013 0	48	28	27	42		16	14	36	59	17	26	17	11	12		12	
	25		50	30	30	46		18	17	39	65.5	19.5	31	19	13	14		17	
	32	+0.016 0	54	30	33	48		21	20	42	71	23	38					21	Screw : M12-50 Pin : 6-30 Plug secw : M8 Pin : 6-20

Catalog No	D	¢ Ù	¢ Ù	¢ Ù
50501-T	10~32	●	●	
50501-A	13~32	●		●

订单方式 Ordering Code(example):	
Retainner	= 50501-T.
D=13mm	= 013
Order No	= 50501-T.013

NYC

50502

球锁紧固定块(轻载三角型)
Ball-lock Retainers (Light Load)

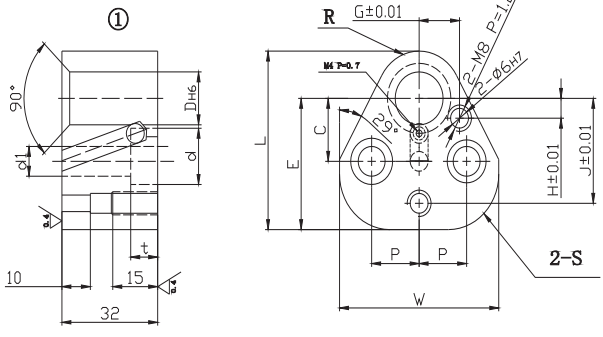



Material:
Steel
Backing plate: HRC56~60

Included:
screws and pin and plug screw

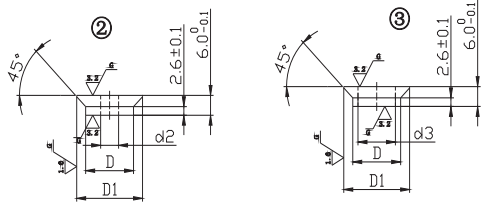

50502.

Type	D	DH6	W	P	C	E	G	H	J	L	R	S	D1	d	d1	t	d2	d3	Accessories
50502-T 50502-A	10	+0.009 0	43.7	11.12	19.05	35.0	9.0	7.5	26.925	44.5	9.5	12	16	14	9	9	6	-	Screw : M8-45 Pin : 6-30 Plug secw : M8 Pin : 6-20
	13	+0.011 0	50.0	14.27		38.1	12.0	6.5	29.970	50.8	12.7	15.2	19					6.2	
	16		53.2	15.87		39.7	13.5	6.0	31.750	54.0	14.3	16.8	22					9	
	20	+0.013 0	59.5	17.47		42.8	16.5	5.0	33.530	60.3	17.5	20	26	17	11	11		12	Screw : M10-50 Pin : 6-30 Plug secw : M8 Pin : 6-20
	25		69.1	19.84	23.82	47.7	22.0	7.0	40.640	69.9	22.2	24.7	31	19	13	14		17	Screw : M12-50 Pin : 6-30 Plug secw : M8 Pin : 6-20
	32	+0.016 0											38					21	
	38		76.6	24.00	27.00	51.4	26.0	10.0	43.993	77.4	26.0	28.5	44					27	

Catalog No	D	¢Ù	¢Ú	¢Û
50502-T	10~32	●	●	
50502-A	13~38	●		●

订单方式 Ordering Code(example):	
Retainner	= 50502-T.
D=13mm	= 013
Order No	= 50502-T.013

NYC

50503

球锁紧固定块(重载三角型)
Ball-lock Retainers (Heavy Load)

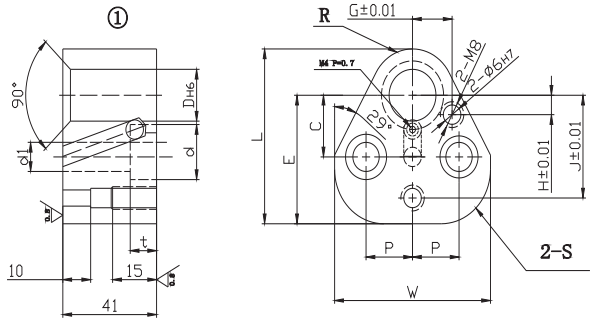

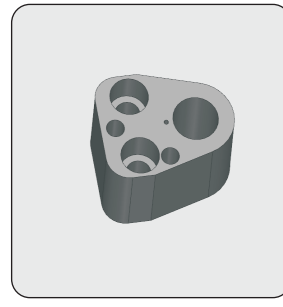

Material:

Steel

Backing plate: HRC56~60

Included:

screws and pin and plug screw

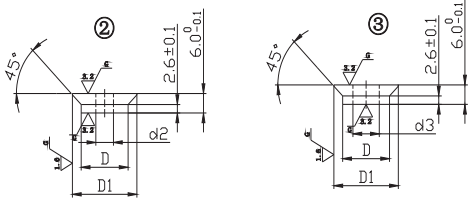

50503.

Type	D H6		W	P	C	E	G	H	J	L	R	S	D1	d	d1	t	d2	d3	Accessories
50503-T 50503-A	10	+0.009 0	43.7	11.12	19.05	35.0	9.0	7.5	26.925	44.5	9.5	12	16	14	9	9	6	–	Screw:M8-40 Pin:6-30 Plug secw:M8 Pin:6-20
	13	+0.011 0	50.0	14.27		38.1	12.0	6.5	29.970	50.8	12.7	15.2	19					6.2	
	16		53.2	15.87		39.7	13.5	6.0	31.750	54.0	14.3	16.8	22					9	
	20	+0.013 0	59.5	17.47		42.8	16.5	5.0	33.530	60.3	17.5	20	26	17	11	11		12	Screw:M10-40 Pin:6-30 Plug secw:M8 Pin:6-20
	25		69.1	19.84	23.82	47.7	22.0	7.0	40.640	69.9	22.2	24.7	31	19	13	14		17	Screw:M12-40 Pin:6-30 Plug secw:M8 Pin:6-20
	32	+0.016 0											38					21	
	40		76.6	24.00	27.00	51.4	26.0	10.0	43.993	77.4	26.0	28.5	44					27	

Catalog No	D	¢ U	¢ U	¢ U
50503-T	10~32	●	●	
50503-A	13~40	●		●

订单方式	Ordering Code(example):
Retainner	= 50503-T.
D = 13mm	= 013
OrderNo	= 50503-T.013

NYC

50504

刃口配合加工用固定块
End Retainer Sets for Manual Process

50504S:
For Irregular shaped punch

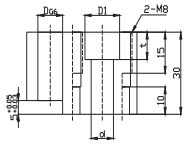

50504:
For round punch

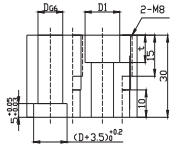

①

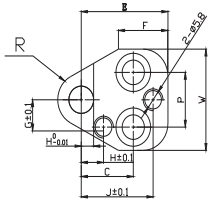

①

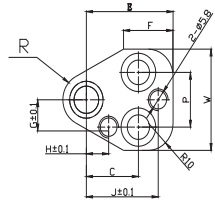

② Backing plate

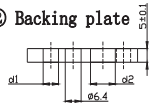

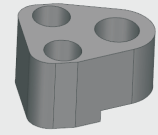

Material:

Steel
Backing plate: HRC56~60

Included:
screws and pin and plug screw

50504./50504S.

Type	D	DH6	W	P	C	E	F	G	H	J	R	D1	d	t	d2	d1 TDB	d1 ADB	Accessories
50504-ZT 50504-TDB 50504-ADB 50504S-ZT	10	+0.014 +0.005	37	20	21	35	20	10	9	29	9.5	14	9	10	10	6.2	7.4	Screw: M8-40 Pin: 6-30 Plug secw:M8
	13	+0.017 +0.006	43	26	23	38		13	11	32	12						9.4	
	16		44	24	26	40		13	12	34	14	17	11	12	12		11.6	Screw: M10-40 Pin: 6-30 Plug secw:M8
	20	+0.020 +0.007	48	28	27	42		16	14	36	17						13.6	
	25		50	30	30	46		18	17	39	19.5						17.6	
	32	+0.025 +0.009	54		33	48		21	20	42	23	20	13	14	14		21.6	Screw: M12-40 Pin: 6-30 Plug secw:M8
	38		58		35	52		23	23	46	26					10.2	27.6	
	45		64	34	38	56		26	27	50	29.5						37.6	

Catalog No	
50504-ZT	主体（包括螺丝，销，螺塞） Retainers included screws, pin and plug screw
50504-TDB	凸模用垫板 Backing plate for Punches
50504-ADB	凹模用垫板 Backing plate for Buttion die

订单方式	Ordering Code(example):
Retainner	= 50504-ZT.
D=13mm	= 013
OrderNo	= 50504-ZT.013

NYC

50505

NC 加工用固定块
Triangle End Retainer Sets

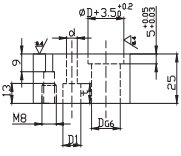

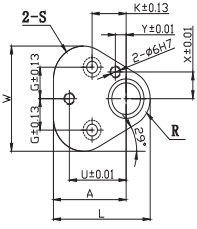

50505:
For round punch

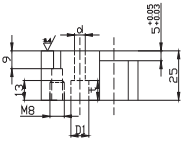

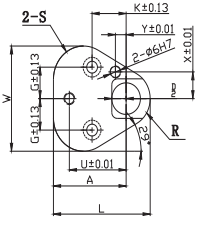

② Backing plate:

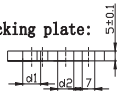

50505S:
For Irregular shaped punch

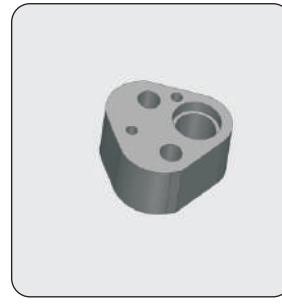

Material:

Steel
Backing plate: HRC56~60

Included:
screws and pin and plug screw

50505./50505S.

Type	D G6		A	W	G	K	R	U	X	Y	S	D1	d	t	d2	d1 TDB	d1 ADB	Accessories
50505-ZT 50505-TDB 50505-ADB 50505S-ZT	10	+0.014 +0.005	35.0	43.7	9.0	19.05	9.5	26.925	9.0	7.5	12.0	14	9	9	10	6.2	7.4	Screw:M8-35 Pin:6-30 Plug secw:M8
	13	+0.017 +0.006	38.1	50.0	12.0		12.7	29.970	12.0	6.5	15.2						9.4	
	16		39.7	53.2	13.5		14.3	31.750	13.5	6.0	16.8						11.6	
	20	+0.020 +0.007	42.8	59.5	16.5		17.5	33.530	16.5	5.0	20.0	17	11	11	12		13.6	Screw:M10-35 Pin:6-30 Plug secw:M8
	25		47.7	69.1	22.0	23.82	22.2	40.640	22.0	7.0	24.7	19	13	14	14		17.6	Screw:M12-35 Pin:6-30 Plug secw:M8

Catalog No	
50505-ZT	主体（包括螺丝，销，螺塞） Retainers included screws, pin and plug screw
50505-TDB	凸模用垫板 Backing plate for Punches
50505-ADB	凹模用垫板 Backing plate for Buttion die

订单方式 Ordering Code(example):	
Retainner	= 50505.
D=13mm	= 013
OrderNo	= 50505.013

NYC

50810
50811

弹顶销
Spring Plungers

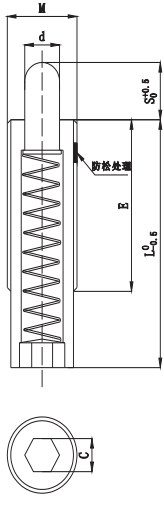



Material:

Sleeve: Steel
Pin: Steel hardened

50810./50811.

d	E	L	C	轻载型 :50810 min. N(kgf)	轻载型 :50810 max.	重载型 :50811 min. N(kgf)	重载型 :50811 max.	Order NO Type	Order NO M	Order NO S
1.6	15	15	1.3	0.9(0.1)	4.1(0.0.4)	1.9(0.2)	8.7(0.9)		4	2
1.6	24	24	1.3	0.7(0.1)	2.2(0.2)	0.29(0.03)	8.3(0.9)			4
2.0	20	20	1.5	1.5(0.2)	9.8(1.0)	2.0(0.2)	22.5(2.3)		5	3
2.0	27	27	1.5	1.6(0.2)	10.4(1.1)	2.5(0.3)	23.4(2.4)			5
2.5	25	25	2	3.4(0.4)	10.4(1.1)	12.5(1.3)	33.8(3.5)		6	3
2.5	30	30	2	1.9(0.2)	9.7(1.0)	6.2(0.6)	32.6(3.3)			5
2.5	30	39	2	1.5(0.2)	10.9(1.1)	5.0(0.5)	32.7(3.3)			10
3.1	25	25	2.5	3.5(0.4)	9.4(1.0)	11.7(1.2)	31.2(3.2)		8	3
3.1	27	27	2.5	2.9(0.3)	9.6(1.0)	8.3(0.9)	31.9(3.3)			5
3.1	30	43	2.5	3.1(0.3)	11.2(1.1)	8.4(0.9)	36.4(3.7)			10
3.8	30	30	3	2.8(0.3)	14.1(1.4)	11.4(1.2)	51.0(5.2)		10	5
3.8	30	43	3	2.9(0.3)	14.6(1.5)	9.5(1.0)	60.8(6.2)			10
3.8	30	58	3	3.4(0.4)	17.0(1.7)	7.2(0.7)	57.3(5.8)			15
5.5	30	30	4	3.5(0.4)	17.1(1.7)	5.6(0.6)	41.0(4.2)		12	5
5.5	35	43	4	2.5(0.3)	21.1(2.1)	5.2(0.5)	55.9(5.7)			10
5.5	35	51	4	2.3(0.2)	19.4(2.0)	5.1(0.5)	53.6(5.5)			15
5.5	35	78	4	4.1(0.4)	22.5(2.3)	8.7(0.9)	56.1(5.7)			20
8	35	60	5	12.1(1.2)	38.0(3.9)	26.5(2.7)	78.0(8.0)		16	10
8	35	60	5	9.7(1.0)	39.7(4.1)	14.2(1.5)	79.4(8.1)	50810		15
8	35	85	5	8.6(0.9)	40.1(4.1)	16.8(1.7)	80.4(8.2)	50811		20
8	35	125	5	17.0(1.7)	38.0(3.9)	19.8(2.0)	81.2(8.3)			30
8	35	125	5	5.5(0.6)	41.2(4.2)	7.6(0.8)	84.3(8.6)			40
8	35	155	5	4.4(0.5)	48.3(4.9)	7.5(0.8)	78.8(8.0)			50
8	35	159	5	4.1(0.4)	49.6(5.1)	6.4(0.7)	78.1(8.0)			60
8	35	185	5	3.1(0.3)	55.7(5.7)	4.3(0.4)	95.0(9.7)			70
8	35	185	5	2.5(0.3)	51.3(5.2)	3.2(0.3)	103.5(10.6)			80
10	45	60	6	14.4(1.5)	79.4(8.1)	22.5(2.3)	147.1(15.0)		20	15
10	45	72	6	13.9(1.4)	83.4(8.5)	23.0(2.4)	157.9(16.1)			20
10	45	96	6	13.6(1.4)	88.3(9.0)	18.6(1.9)	154.0(15.7)			30
10	45	120	6	13.4(1.4)	109.8(11.2)	26.8(2.7)	195.1(19.9)			40
10	45	60	10	27.8(2.8)	65.9(6.7)	40.7(4.2)	127.9(13.0)		24	7
10	45	60	10	25.5(2.6)	106.9(10.9)	46.9(4.8)	226.5(23.1)			15
10	45	75	10	15.3(1.6)	101.0(10.3)	43.1(4.4)	224.6(22.9)			20
10	45	100	10	19.1(2.0)	100.0(10.2)	47.8(4.9)	231.4(23.6)			30
10	45	124	10	17.1(1.7)	98.1(10.0)	44.1(4.5)	225.5(23.0)			40
14	45	66	14	9.3(2.0)	104.4(10.7)	32.4(3.3)	259.9(26.5)		30	15
14	45	78	14	55.2(5.6)	156.9(16.0)	72.6(7.4)	356.5(36.4)			20
14	45	100	14	28.4(2.9)	128.3(13.1)	41.6(4.2)	290.3(29.6)			30

订单方式 Ordering Code(example):

Spring Plungers	= 50810.
M = 4	= 4.
S = 2 mm	= 2
Order No	= 50810.4.2

NYC

50901

顶针
Ejector pin, hardened, ISO 8694

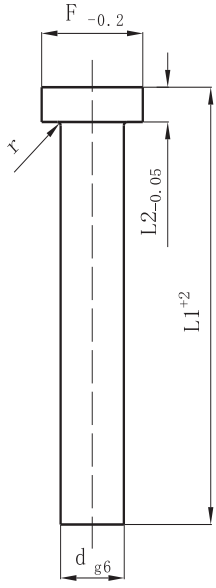

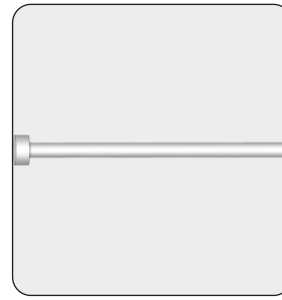

Material: WS

Hardness:
Shank 60±2 HRC
Head 45±5 HRC

50901.

d	F	L2	r	L1 40	L1 63	L1 80	L1 100	L1 250	L1 160	L1 200	L1 250	L1 315	L1 400	L1 500	L1 630	L1 800	L1 1000	L1 1250	L1 1600
1	2.5	1.2	0.2	●	●	●	●	●	●	●									
1.1	2.5	1.2	0.2	●	●	●	●	●	●	●									
1.2	2.5	1.2	0.2	●	●	●	●	●	●	●									
1.3	3	1.5	0.2	●	●	●	●	●	●	●									
1.4	3	1.5	0.2	●	●	●	●	●	●	●									
1.5	3	1.5	0.2	●	●	●	●	●	●	●									
1.6	3	1.5	0.2	●	●	●	●	●	●	●									
1.7	3	1.5	0.2	●	●	●	●	●	●	●									
1.8	3	1.5	0.2	●	●	●	●	●	●	●									
1.9	3	1.5	0.2	●	●	●	●	●	●	●									
2	4	2	0.2	●	●	●	●	●	●	●	●	●							
2.2	4	2	0.2				●	●	●	●	●	●							
2.5	5	2	0.3	●	●	●	●	●	●	●	●	●							
2.7	5	2	0.3				●	●	●	●	●	●							
3	6	3	0.3	●	●	●	●	●	●	●	●	●	●	●					
3.2	6	3	0.3				●	●	●	●	●	●	●						
3.5	7	3	0.3				●	●	●	●	●	●	●						
3.7	7	3	0.3				●	●	●	●	●	●	●						
4	8	3	0.3	●	●	●	●	●	●	●	●	●	●	●					
4.2	8	3	0.3				●	●	●	●	●	●	●						
4.5	8	3	0.3				●	●	●	●	●	●	●						
4.7	8	3	0.3				●	●	●	●	●	●	●						
5	10	3	0.3	●	●	●	●	●	●	●	●	●	●	●	●	●			
5.2	10	3	0.3				●	●	●	●	●	●	●	●					
5.5	10	3	0.3				●	●	●	●	●	●	●	●					
6	12	5	0.5	●	●	●	●	●	●	●	●	●	●	●	●	●			
6.2	12	5	0.5				●	●	●	●	●	●	●	●	●				
6.5	12	5	0.5				●	●	●	●	●	●	●	●					
7	12	5	0.5				●	●	●	●	●	●	●	●	●				
8	14	5	0.5		●	●	●	●	●	●	●	●	●	●	●	●	●	●	●
8.2	14	5	0.5				●	●	●	●	●	●	●	●	●	●			
8.5	14	5	0.5				●	●	●	●	●	●	●	●	●				
9	14	5	0.5				●	●	●	●	●	●	●	●	●				
10	16	5	0.5			●	●	●	●	●	●	●	●	●	●	●	●	●	●
10.2	16	5	0.5				●	●	●	●	●	●	●	●	●				
10.5	16	5	0.5				●	●	●	●	●	●	●	●	●				
11	16	5	0.5						●	●	●	●	●	●	●				
12	18	7	0.8			●	●	●	●	●	●	●	●	●	●	●	●		
12.2	18	7	0.8					●	●	●	●	●	●	●					
12.5	18	7	0.8				●	●	●	●	●	●	●	●	●				
14	22	7	0.8			●	●	●	●	●	●	●	●	●	●	●	●		
16	22	7	0.8				●	●	●	●	●	●	●	●	●	●	●		
18	24	7	0.8						●	●	●	●	●	●	●				
20	26	8	1						●	●	●	●	●	●	●	●	●		

订单方式 Ordering Code(example):	
Ejector pin,hardened	= 50901.
d=1mm	= 0100.
L1=40mm	= 040
Order No	=50901.0100.040

NYC

50902

氮化顶针
Ejector pins–Nitrided ISO 8694

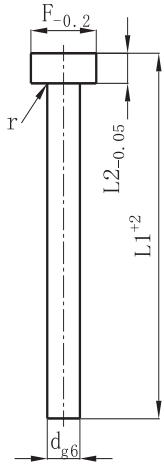

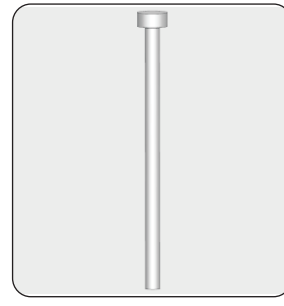

Material: NWA

Hardness:
Shank ＞950 HV 0.3
Head 45±5 HRC

50902.

d	F	L2	r	L1 100	L1 125	L1 160	L1 200	L1 250	L1 315	L1 400	L1 500	L1 630	L1 800	L1 1000
1.5	3	1.5	0.2	●	●	●	●							
2	4	2	0.2	●	●	●	●	●						
2.2	4	2	0.2	●	●	●	●							
2.4	5	2	0.2	●	●	●	●	●	●					
2.5	5	2	0.3	●	●	●	●	●	●					
2.7	5	2	0.3	●	●	●	●							
2.9	5	2	0.3	●	●	●	●	●	●					
3	6	3	0.3	●	●	●	●	●	●	●	●			
3.2	6	3	0.3	●	●	●	●	●	●	●				
3.4	6	3	0.3	●	●	●	●	●	●					
3.5	7	3	0.3	●	●	●	●	●	●	●				
3.7	7	3	0.3	●	●	●	●	●	●	●				
3.9	7	3	0.3	●	●	●	●	●	●					
4	8	3	0.3	●	●	●	●	●	●	●	●			
4.2	8	3	0.3	●	●	●	●	●	●	●				
4.4	8	3	0.3	●	●	●	●	●	●					
4.5	8	3	0.3	●	●	●	●	●	●	●				
4.7	8	3	0.3	●	●	●	●	●	●					
4.9	8	3	0.3	●	●	●	●	●	●					
5	10	3	0.3	●	●	●	●	●	●	●	●	●	●	
5.2	10	3	0.3	●	●	●	●	●	●	●	●			
5.4	10	3	0.3	●	●	●	●	●	●					
5.5	10	3	0.3	●	●	●	●	●	●	●	●			
5.7	10	3	0.3	●	●	●	●	●	●					
5.9	10	3	0.3	●	●	●	●	●	●					
6	12	5	0.5	●	●	●	●	●	●	●	●	●	●	
6.2	12	5	0.5	●	●	●	●	●	●	●	●	●		
6.5	12	5	0.5	●	●	●	●	●	●	●	●			
6.7	12	5	0.5	●	●	●	●	●	●					
6.9	12	5	0.5	●	●	●	●	●	●					
7	12	5	0.5	●	●	●	●	●	●	●	●	●		
7.2	12	5	0.5	●	●	●	●	●	●					
7.8	12	5	0.5	●	●	●	●	●	●					
8	14	5	0.5	●	●	●	●	●	●	●	●	●	●	●
8.2	14	5	0.5	●	●	●	●	●	●	●	●	●	●	
8.4	14	5	0.5	●	●	●	●	●	●					
8.5	14	5	0.5	●	●	●	●	●	●	●	●	●		
9	14	5	0.5	●	●	●	●	●	●	●	●	●		
9.7	14	5	0.5	●	●	●	●	●	●					
10	16	5	0.5	●	●	●	●	●	●	●	●	●	●	●
10.2	16	5	0.5	●	●	●	●	●	●	●	●	●	●	
10.5	16	5	0.5	●	●	●	●	●	●	●	●	●		
11	16	5	0.5	●	●	●	●	●	●	●	●	●		
12	18	7	0.8	●	●	●	●	●	●	●	●	●	●	●
12.2	18	7	0.8	●	●	●	●	●	●	●	●	●	●	
12.5	18	7	0.8	●	●	●	●	●	●	●	●	●	●	
14	22	7	0.8	●	●	●	●	●	●	●	●	●	●	●
16	22	7	0.8	●	●	●	●	●	●	●	●	●	●	●
18	24	7	0.8			●	●	●	●	●	●	●	●	●
20	26	8	1			●	●	●	●	●	●	●	●	●
25	32	10	1				●	●	●	●	●	●	●	●
32	40	10	1				●	●	●	●	●	●	●	●

订单方式 Ordering Code(example):

Ejector pin,nitrided	= 50902.
d=1.5mm	= 0150.
L1=100mm	= 100
Order No	= 50902.0150.100

NYC

50907

顶针
Ejector pin Hardened ISO 8694

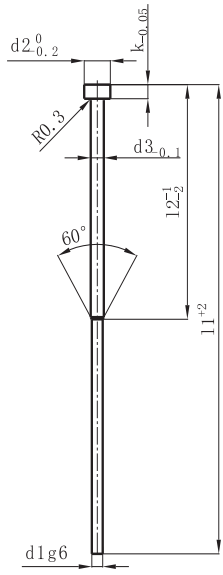

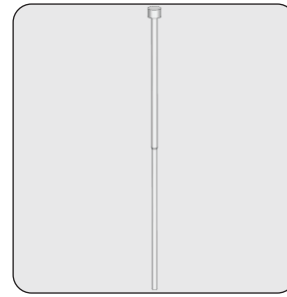

Material: WS

Hardness:
Shank 60±2 HRC
Head 45±5 HRC

50907.

				l1	63	80	100	125	160	200
d1	d2	d3	k	l2	30	32	50	50	63	80
0.8	4	2	2		●	●	●	●	●	
0.9	4	2	2		●	●	●	●	●	
1	4	2	2		●	●	●	●	●	●
1.1	4	2	2		●	●	●	●	●	●
1.2	4	2	2		●	●	●	●	●	●
1.3	4	2	2		●	●	●	●	●	●
1.4	4	2	2		●	●	●	●	●	●
1.5	6	3	3		●	●	●	●	●	●
1.6	6	3	3			●	●	●	●	●
1	6	3	3			●	●	●	●	●
1.8	6	3	3			●	●	●	●	●
1.9	6	3	3			●	●	●	●	●
2	6	3	3			●	●	●	●	●
2.1	6	3	3				●	●	●	●
2.2	6	3	3			●	●	●	●	●
2.3	6	3	3				●	●	●	●
2.4	6	3	3				●	●	●	●
2.5	6	3	3				●	●	●	●

订单方式 Ordering Code(example):	
Ejector pin,hardened,round stepped	= 50907.
d1=0.8mm	= 0080.
l1=63 mm	= 063
Order No	= 50907.0080.063

NYC

50908

氮化顶针
Ejector pins-Nitrided ISO 8694

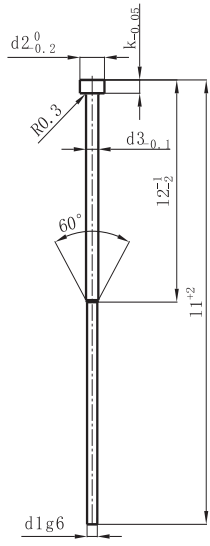

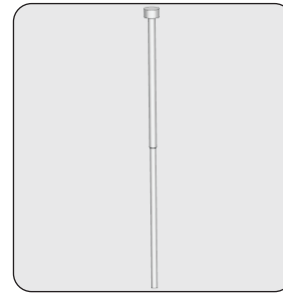

Material: NWA

Hardness:
Shank ＞950 HV 0.3
Head 45±5 HRC

50908.

				l1	63	80	100	125	160	200
d1	d2	d3	k	l2	30	32	50	50	63	80
0.8	4	2	2		●	●	●	●	●	
0.9	4	2	2		●	●	●	●	●	
1	4	2	2		●	●	●	●	●	
1.1	4	2	2		●	●	●	●	●	
1.2	4	2	2		●	●	●	●	●	
1.3	4	2	2		●	●	●	●	●	
1.4	4	2	2		●	●	●	●	●	
1.5	6	3	3		●	●	●	●	●	●
1.6	6	3	3			●	●	●	●	●
1.7	6	3	3			●	●	●	●	●
1.8	6	3	3			●	●	●	●	●
1.9	6	3	3			●	●	●	●	●
2	6	3	3			●	●	●	●	●
2.2	6	3	3			●	●	●	●	●
2.5	6	3	3			●	●	●	●	●

订单方式 Ordering Code(example):	
Ejector pins-Nitrided	= 50908.
d1=1.5mm	= 0150.
l1=63 mm	= 063
Order No	= 50908.0150.063

NYC

50913

扁顶针
Blade Ejecision-Hardened

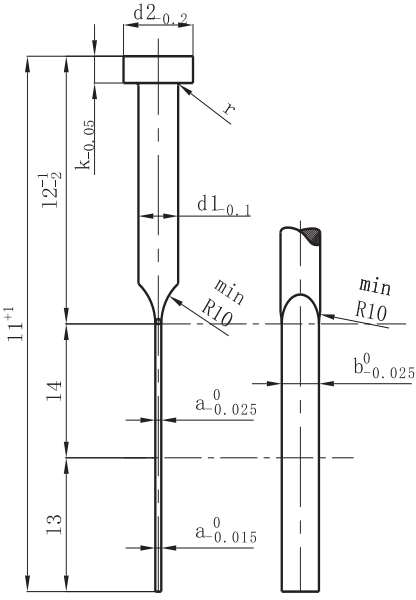



Material: WS

Hardness:
Shank 60±2 HRC
Head 45±5 HRC

50913.

d1				4	4.2	4.2	4.2	5	5	5	6	6	6	6	8	8	8	10	10	12	12
d2				8	8	8	8	10	10	10	12	12	12	12	14	14	14	16	16	18	18
k				3	3	3	3	3	3	3	5	5	5	5	5	5	5	5	5	7	7
r				0.3	0.3	0.3	0.3	0.3	0.3	0.3	0.5	0.5	0.5	0.5	0.5	0.5	0.5	0.5	0.5	0.8	0.8
a				1	0.8	1	1.2	1	1.2	1.5	1	1.2	1.5	2	1.2	1.5	2	1.5	2	2	2.5
b				3.5	3.8	3.8	3.8	4.5	4.5	4.5	5.5	5.5	5.5	5.5	7.5	7.5	7.5	9.5	9.5	11.5	11.5
l1	l2	l3	l4																		
63	30	25	10	●	●	●															
80	40	30	10	●	●	●	●	●	●		●	●									
100	50	40	10	●	●	●	●	●	●	●	●	●	●	●	●						
125	60	50	15	●	●	●	●	●	●	●	●	●	●	●	●	●					
160	80	50	30			●	●	●	●	●	●	●	●	●	●	●	●	●			
200	100	60	40				●	●	●	●	●	●	●	●	●	●	●	●	●	●	●
250	125	60	65													●	●	●	●	●	●
315	160	70	85																●	●	●

订单方式 Ordering Code(example):	
Ejector pin,hardened	= 50913.
a=1mm	= 10.
b=3.5mm	= 035.
l1=63mm	= 063
Order No	= 50913.10.035.063

NYC

50914

氮化扁顶针
Blade Ejecision-Nitrided



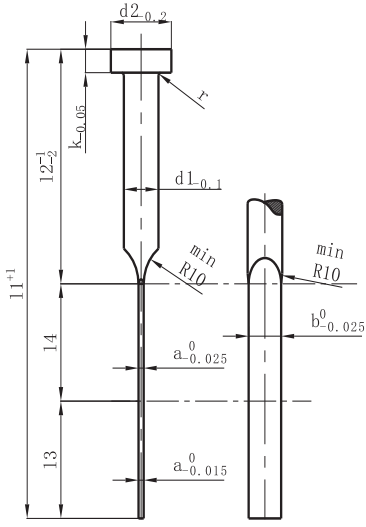

Material: NWA

Hardness:
Shank 〉950 HV 0. 3
Head 45±5 HRC

50914.

d1				4	4.2	4.2	4.2	5	5	5	6	6	6	6	8	8	8	10	10	12	12	16	16
d2				8	8	8	8	10	10	10	12	12	12	12	14	14	14	16	16	18	18	22	22
k	4.5	0.5		3	3	3	3	3	3	3	5	5	5	5	5	4	5	5	5	7	7	7	7
r	5.5	0.5		0.3	0.3	0.3	0.3	0.3	0.3	0.3	0.5	0.5	0.5	0.5	0.5	0.5	0.5	0.5	0.5	0.8	0.8	0.8	0.8
a	6.5	0.5		1	0.8	1	1.2	1	1.2	1.5	1	1.2	1.5	2	1.2	1.5	2	1.5	2	2	2.5	2	2.5
b	8	0.5		3.5	3.8	3.8	3.8	4.5	4.5	4.5	5.5	5.5	5.5	5.5	7.5	7.5	7.5	9.5	9.5	11.5	11.5	15.5	15.5
l1	l2	l3	l4																				
63	30	25	10	●	●	●																	
80	40	30	10	●	●	●	●	●	●		●	●											
100	50	40	10	●	●	●	●	●	●	●	●	●	●		●								
125	60	50	15	●	●	●	●	●	●	●	●	●	●	●	●	●							
160	80	50	30			●	●	●	●	●	●	●	●	●	●	●	●	●					
200	100	60	40				●			●			●	●	●	●	●	●	●	●	●	●	●
250	125	60	65													●	●	●	●	●	●	●	●
315	160	70	85														●	●	●	●	●	●	●
400	200	95	105																●	●	●	●	●

订单方式 Ordering Code(example):		
Ejector pin,nitrided	= 50914.	
a=1mm	=	10.
b=3.5mm	=	35.
l1=63mm	=	063
Order No	= 50914.10.35.063	

NYC

50919

司筒
Ejector Sleeves–Hardened ISO 8405

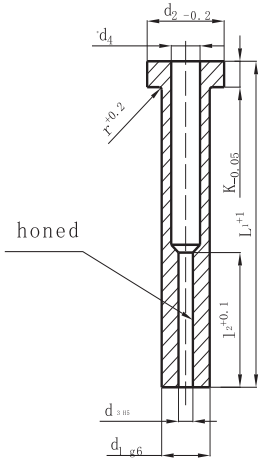

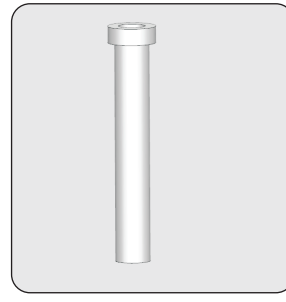

Material: WS

Hardness:
Shank 60±2 HRC
Head 45±5 HRC

50919.

d1	d3	d4	d2	k	r	l2	l1	l1	l1	l1	l1	l1	l1	l1	l1	l1	l1	l1
							70	75	80	90	100	125	150	175	200	225	250	275
2.5	1.25	1.6	5	2	0.3	20	●		●	●	●							
3	1.5	1.8	6	3	0.3	35		●			●	●	●					
3	1.6	1.9	6	3	0.3	35		●			●	●	●	●				
4	2	2.5	8	3	0.3	35		●			●	●	●	●	●	●		
4	2.2	2.4	8	3	0.3	35		●			●	●	●	●	●	●		
5	2.5	3	10	3	0.3	35		●			●	●	●	●	●	●		
5	2.7	3	10	3	0.3	45		●			●	●	●	●	●	●		
5	3	3.5	10	3	0.3	45		●			●	●	●	●	●	●	●	
5	3.2	3.5	10	3	0.3	45		●			●	●	●	●	●	●	●	
6	3.5	4	12	5	0.5	45		●			●	●	●	●	●	●	●	
6	3.7	4	12	5	0.5	45		●			●	●	●	●	●	●	●	
6	4	4.3	12	5	0.5	45		●			●	●	●	●	●	●	●	●
8	4.2	5	14	5	0.5	45		●			●	●	●	●	●	●	●	●
8	5	5.5	14	5	0.5	45		●			●	●	●	●	●	●	●	●
8	5.2	5.5	14	5	0.5	45		●			●	●	●	●	●	●	●	●
10	6	6..5	16	5	0.5	45		●			●	●	●	●	●	●	●	●
10	6.2	6.5	16	5	0.5	45		●			●	●	●	●	●	●	●	●
12	8	8.5	20	7	0.8	45		●			●	●	●	●	●	●	●	●
12	8.2	8.5	20	7	0.8	45		●			●	●	●	●	●	●	●	●
14	10	10.5	22	7	0.8	45		●			●	●	●	●	●	●	●	●
14	10.5	11	22	7	0.8	45		●			●	●	●	●	●	●	●	●
16	12	12.5	22	7	0.8	45		●			●	●	●	●	●	●	●	●
16	12.5	13	22	7	0.8	45		●			●	●	●	●	●	●	●	●

订单方式 Ordering Code(example):	
Ejector sleeve,hardened	= 50919.
d3=1.25mm	= 0125.
l1=70mm	= 070
Order No	= 50919.0125.070

NYC

50920

氮化司筒
Ejector Sleeves–Nitrided ISO 8405

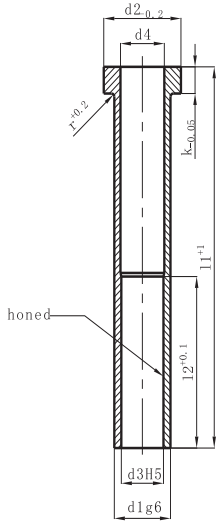

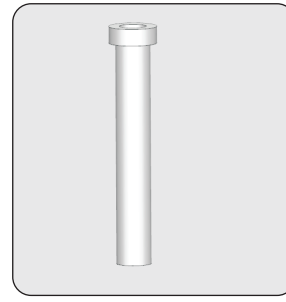

Material: NWA

Hardness:
Shank ＞950 HV 0.3
Head 45±5 HRC

50920.

d1	d3	d4	d2	k	r	l2	l1	l1	l1	l1	l1	l1	l1	l1	l1
							75	100	125	150	175	200	225	250	275
3	1.5	1.8	6	3	0.3	35	●	●	●	●					
3	1.6	1.9	6	3	0.3	35	●	●	●	●					
4	2	2.5	8	3	0.3	35	●	●	●	●					
4	2.2	2.4	8	3	0.3	35	●	●	●	●					
5	2.5	3	10	3	0.3	35	●	●	●	●					
5	2.7	3	10	3	0.3	45	●	●	●	●					
5	3	3.5	10	3	0.3	45	●	●	●	●	●				
5	3.2	3.5	10	3	0.3	45	●	●	●	●	●				
6	3.5	4	12	5	0.5	45	●	●	●	●	●				
6	3.7	4	12	5	0.5	45	●	●	●	●	●				
6	4	4.3	12	5	0.5	45	●	●	●	●	●	●			
8	4.2	5	14	5	0.5	45	●	●	●	●	●	●			
8	5	5.5	14	5	0.5	45	●	●	●	●	●	●			
8	5.2	5.5	14	5	0.5	45	●	●	●	●	●	●			
10	6	6.5	16	5	0.5	45	●	●	●	●	●	●	●	●	
10	6.2	6.5	16	5	0.5	45	●	●	●	●	●	●	●	●	
12	8	8.5	20	7	0.8	45	●	●	●	●	●	●	●	●	●
12	8.2	8.5	20	7	0.8	45	●	●	●	●	●	●	●	●	●
14	10	10.5	22	7	0.8	45		●	●	●	●	●	●	●	●
14	10.2	10.5	22	7	0.8	45		●	●	●	●	●	●	●	●
16	12	12.5	22	7	0.8	45		●	●	●	●	●	●	●	●

订单方式 Ordering Code(example):	
Ejector sleeve,nitrided	= 50920.
d3=1.5mm	= 150.
l1=75mm	= 75
Order No	= 50920.150.75

NYC

50310

起吊棒
Die Lifting Bolts

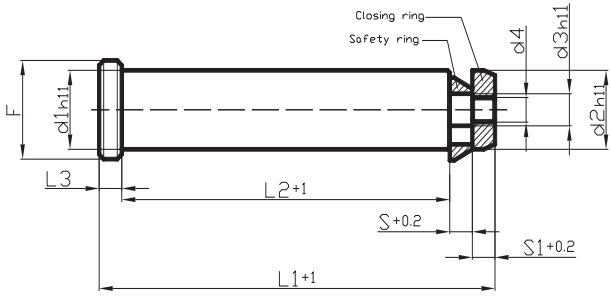

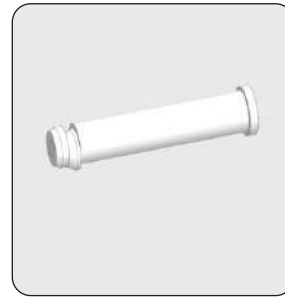

Material:
Steel

50310.

Order No	Max.carrying capacity* (2 die lifting bolts)	F	d1	d2	d3	d4	L1	L2	L3	S	S1
50310.032	6400kg	40	32	32	13	M10	175	145	10	10	10
50310.040	10000kg	50	40	40	16	M12	225	188	10	14	13
50310.050	16000kg	60	50	50	24	M20	273	230	11	16	16
50310.063	25000kg	75	63	63	30	M24	347	295	14	18	20
50310.076	63000kg	95	76	76	40	M36	422	360	15	20	27

*The maximum permissible load capacity is to be calculated such that two bolts on their own are capable of carrying or turning the tool.

Ordering Code (example):	
Die Lifting Bolt With Safety Ring	
to VDI 3366	= 50310.
d1 =32mm	= 032
Order No	= 50310.032

NYC

50311

吊耳
Lifter stud VDI 3366

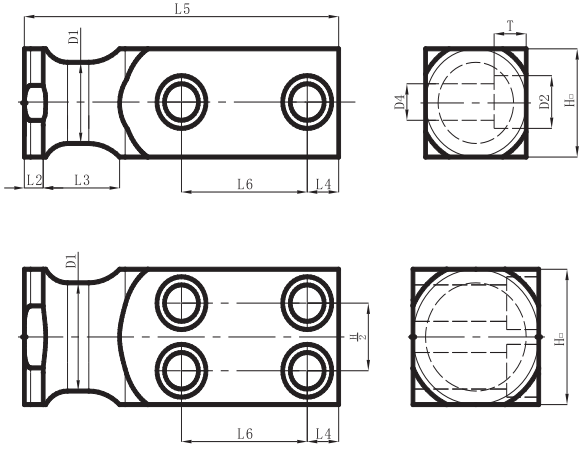

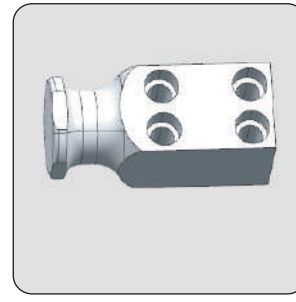

Material:

Steel

50311

Order NO	D1	D2	D4	H	L2	L3	L4	L5	L6	T	Number of screw holes	Lifting capacity [kg]
50311.020	16	9	15	20	6	20	10	80	34	9	2	320
50311.025	20	11	18	25	8	25	10	90	37	11	2	630
50311.035	25	13.5	20	35	8	30	12	100	38	13	2	1250
50311.040	32	17.5	26	40	10	32	16	120	46	17.5	2	2000
50311.050	40	22	33	50	10	40	18	140	54	21.5	2	3200
50311.060	50	26	40	60	12	45	22	160	59	25.5	2	5000
50311.080	63	22	33	80	12	50	20	200	78	21.5	4	8000
50311.100	80	26	40	100	15	65	25	250	100	25.5	4	12500
50311.120	100	33	48	120	15	80	30	300	125	32	4	20000

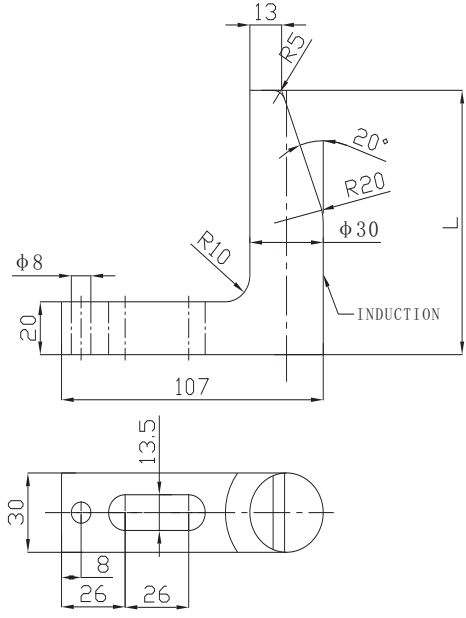

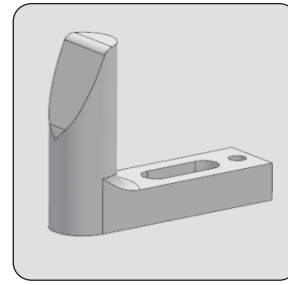

Material: Steel

Hardness: HRC>56

50320

Order No.	L
50320.065	65
50320.070	70
50320.075	75
50320.080	80
50320.085	85
50320.090	90
50320.095	95
50320.100	100
50320.105	105
50320.110	110
50320.115	115
50320.120	120
50320.125	125
50320.130	130
50320.135	135
50320.140	140
50320.145	145
50320.150	150
50320.155	155
50320.160	160
50320.165	165
50320.170	170
50320.175	175
50320.180	180

Order No.	L
50320.185	185
50320.190	190
50320.195	195
50320.200	200
50320.205	205
50320.210	210
50320.215	215
50320.220	220
50320.225	225
50320.230	230
50320.235	235
50320.240	240
50320.245	245
50320.250	250
50320.260	260
50320.270	270
50320.280	280
50320.290	290
50320.300	300
50320.310	310
50320.320	320
50320.330	330
50320.340	340
50320.350	350

50212
50213

压板
Clamp for Guide Bushes

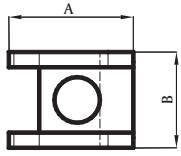

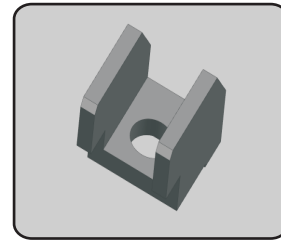

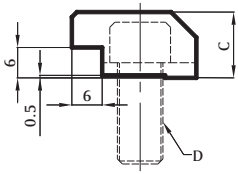

材质 Material :

钢 Steel

Notice

Break all sharp edges

50212/50213.

Order No	A	B	C	D
50212	24.6	18.9	13	M8×1.25×20
50213	27.9	23.5	15.5	M10×15×20

订单方式 Ordering Code(example):

Order No =50212

Pos. 1
50153 Retaiting Plates to VDI

Pos.2
50050 Sliding Pads, small dimensions

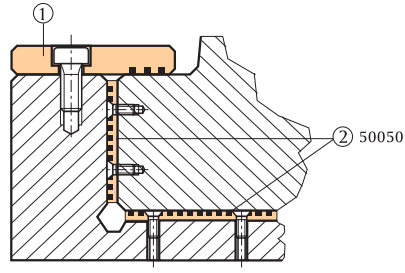

Pos. 1
50152 Flat Guide Bars
50050 Sliding Pads.
small dimensions

Pos.2
50100 Angled Guide Gibs
50101 Angled Guide Gibs

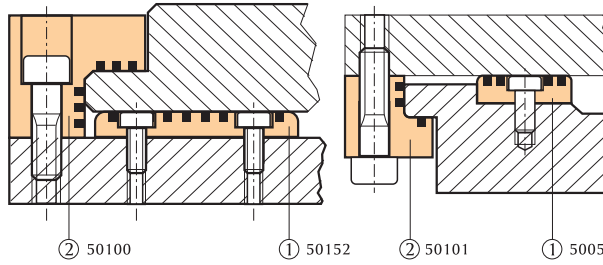

Pos. 1
05152. Flat Guide Bars

Pos.2
50064.AFNOR Sliding Pads

Pos.3
50070. Guide Bars with three
sliding surfaces

Pos.4
05118 Single-Sided Prismatic
Guides(Bronze)

Pos.5
05119 Single-sided Prismatic
Sliding Blocks(steel)

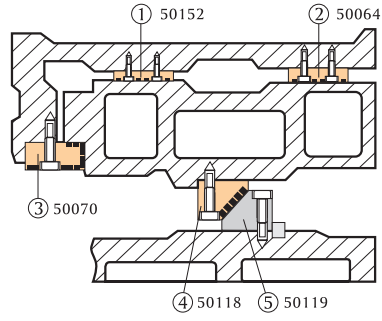

Pos. 1
50055 Guide Pads(-ISO 90183)

Pos.2
50051. Sliding Pads VDI 3357
50052

Pos.3
50069. Guide Bars with two
sliding surfaces

Pos.4
50116 Prismatic Guides

Pos.5
50117 Sliding Blocks

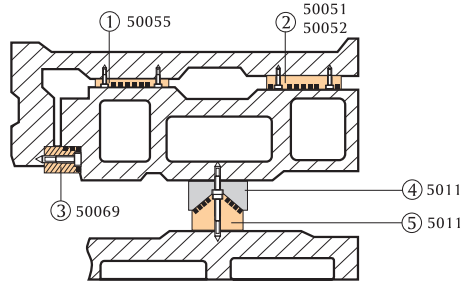



固体自润滑导套/轴承
Oilless Guide Bushes



边法兰导套/轴承
Oilless Guide Bushes
with collar



中法兰导套/轴承
Oilless Guide Bushes with collar
Bronze with Non-Liquid Lubricant

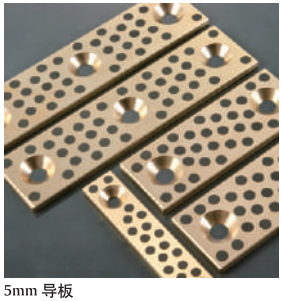

5mm 导板
5mm Sliding Pads

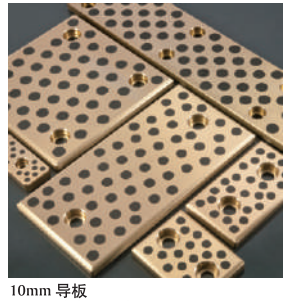

10mm 导板
10mm Sliding Pads

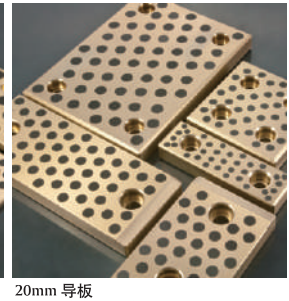

20mm 导板
20mm Sliding Pads



导柱
Guide Pillars

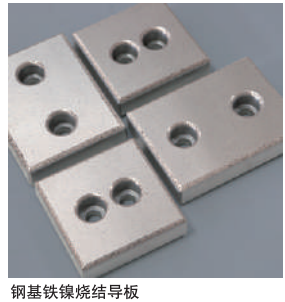

钢基铁镍烧结导板
Sliding Pads, Steel base， Iron sinter
lubrication alloy layer



钢基铜合金中法兰导套
Steel with Bronze coated internal bore



导板
Sliding Pads



钢导向件
Steel Guide Elements


CONTURA

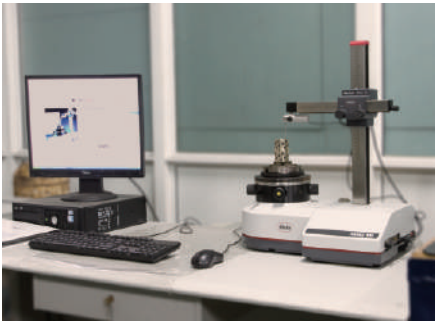

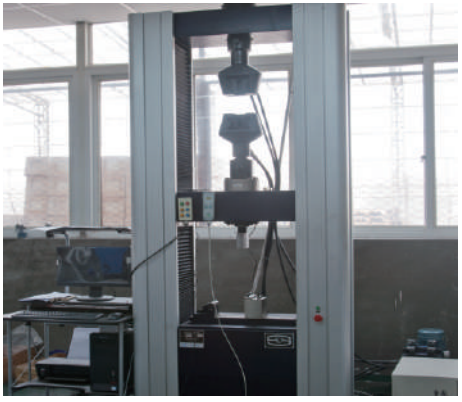

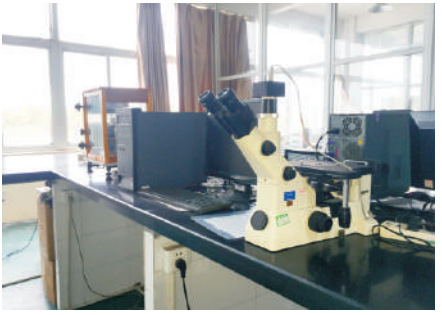


V
M
S



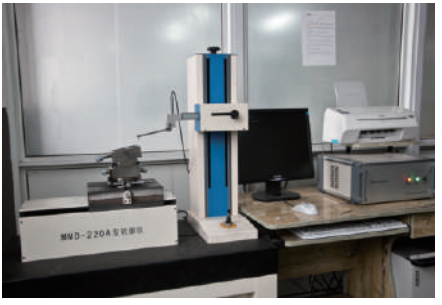


DMU 65 monoBLOCK


1t









NYC®
奥钢联合资企业

voestalpine
ONE STEP AHEAD

Standard Die Components Technology

嘉兴迈特尔宝欣机械工业有限公司
JIAXING NYC INDUSTRIAL CO.,LTD.

浙江省嘉善县罗星街道人民大道2501号
No. 2501, People's Avenue, Luoxing District
Jiashan, Zhejiang, P.R.C, 314100
Tel : +86-573-8406 2599
Fax: +86-573-8406 2589
Email: sales@nyc-ind.com
www.nyc-ind.com

Ver.2020